weather guard®

...“The Professionals’ Choice”

For Full-Size and Mini Vans

See our other catalog
Weather Guard® for Trucks
For quality storage boxes, ladder racks and accessories for full-size and mini pickup trucks and flatbeds.

weather guard®

Storage Systems for Full-Size and Mini Vans

Four reasons why Weather Guard® storage systems out perform the rest.

1. **Quality Design and Engineering**
2. **Superior Materials**
3. **Excellence in Manufacturing and Quality Control**
4. **Armor-Tuf™ Bonded Polyester Coating**

Designed by Professionals ... for Professionals.

Specially designed Weather Guard® storage systems provide the professional craftsman with the durability, convenience and security he needs to store, transport and protect tools and equipment on the jobsite and at home.

Weather Guard® products offer you greater load capacity, strength and rigidity as well as a wide variety of functional, space-saving designs to meet different storage requirements while maximizing van cargo area.

Armor-Tuf™ Bonded Polyester Coating keeps your Weather Guard® equipment looking good even after years of rough service.

Armor-Tuf™ is a baked polyester coating that is electrostatically applied to completely cover all metal surfaces with a thick, flexible and protective shield. Applied up to 4 mils thick, the Armor-Tuf™ coating far exceeds the protective value of ordinary painted finishes. Under normal conditions, Armor-Tuf™ resists peeling, flaking and chipping three times longer than normal baked finishes.

...“The Professionals’ Choice”

weather guard®

Modular Shelving Units for Full-Size and Mini Vans

Weather Guard® products offer a better way to keep your tools, equipment and supplies completely organized and readily available with the largest selection of van storage equipment available.

Choose from shelving,drawer units, racks, cabinets and boxes, pack rats, strong boxes and a variety of accessories to meet every storage need. For arrangement ideas, see the package layouts on page 12.

Complete step-by-step instructions are included with all Weather Guard® products to make installation simple.

3 Types of Weather Guard® Van Shelves

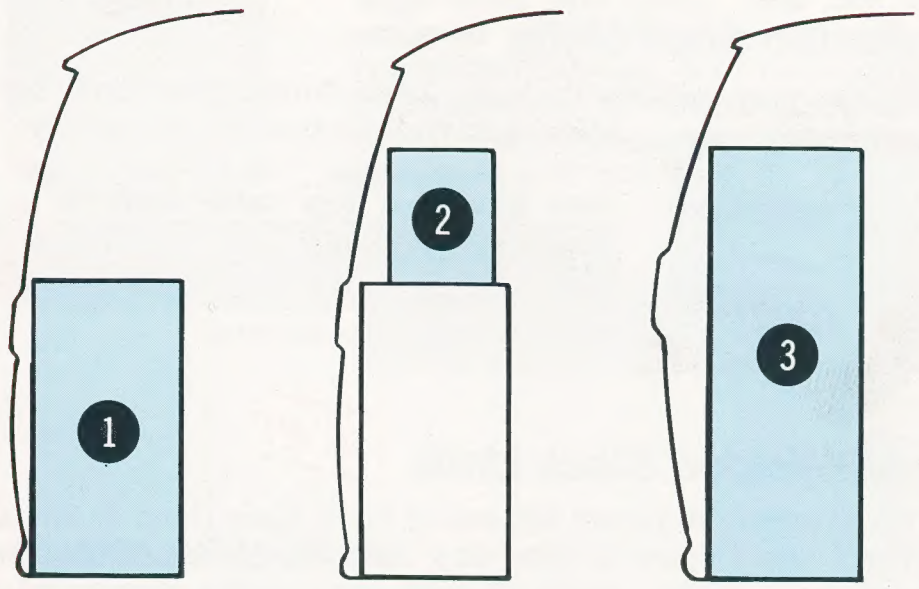

Base Shelf Units fit snug against the side wall of the van to maximize the center cargo area.

Stacking Shelf Units fit nicely on top of the Base Shelf Units to provide additional shelves up to the full interior height of the vehicle.

Jumbo Shelf Unit gives you a full 14" depth from top to bottom for storing bulkier items.

Space efficiency is the key to any van storage system installation. That's why Weather Guard® storage systems offer the widest variety of van shelving available. Weather Guard® storage systems allow you to design a package that uses every inch of available space.

YOU GET

- Safety and strength from 3" hemmed shelf lips that are pre-punched for quick assembly. High shelf lips keep items in place.
- Adjustable shelf spacing from tough, pre-punched end panels that fully enclose shelf ends.
- Adjustable bin dividers on 3" centers for convenient spacing.
- Armor-Tuf™ Bonded Polyester Coating for long-lasting durability and good looks. This super-tough finish stands up to rough service and enhances visibility inside the van.

Base Shelf Units

Base Shelf Units bolt securely to floor to provide rigid storage. They also serve as building blocks for Stacking Shelves and Parts Cabinets.

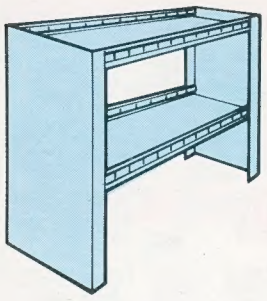

Model	Dimensions-Inches Height	Length	Depth	No. of Shelves	Bin Dividers	Ship Wt. Lbs.
8232	24	36	14	2	6	41
8262	24	60	14	2	6	52
8322	30	30	14	2	6	36
8332	30	36	14	2	6	50
8342	30	42	14	2	6	54
8352	30	51	14	2	6	58
8362	30	60	14	2	6	54

NOTE: All units require assembly

Stacking Shelf Units

Utilize space above Base Units without cutting into center aisle with these space-efficient Stacking Shelves. The Stacking Units bolt securely to the Base Units.

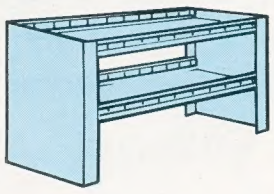

Model	Dimensions-Inches Height	Length	Depth	No. of Shelves	Bin Dividers	Ship Wt. Lbs.
8132	17	36	10	2	6	35
8142	17	42	10	2	6	39
8152	17	51	10	2	6	44
8162	17	60	10	2	6	48

NOTE: All units require assembly

Jumbo Shelf Units

BIG storage capacity for bulky items. Jumbo Shelf Units bolt securely to floor for strength and rigidity.

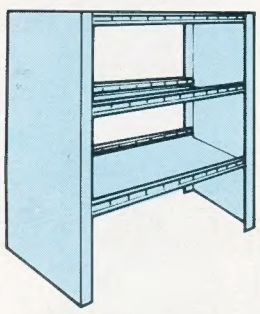

Model	Dimensions-Inches Height	Length	Depth	No. of Shelves	Bin Dividers	Ship Wt. Lbs.
8443	44.0	42.0	14.0	3	12	86
8453	44.0	51.0	14.0	3	12	94

NOTE: All units require assembly

All-Welded Stack Units NEW!

No assembly required! Mounts to floor, Base Units or Wheel Well Units. 3 sloped dividers on 9" centers provide confined bin space for parts and supplies. Space under lower shelf accepts Parts Cabinets for small parts storage.

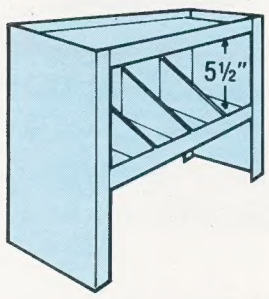

Model	Dimensions-Inches Height	Length	Depth	No. of Shelves	Bin Dividers	Ship Wt. Lbs.
8133	18	36	12	2	3	24
8233	30	36	12	3	6	40

Wheel Well Base Cabinet NEW!

Cover wheel well to provide flat, sturdy foundation for Parts Cabinets, Work Benches or Drawer Units. Door provides concealed storage area for flexible or odd shaped items. Fully welded — no assembly required.

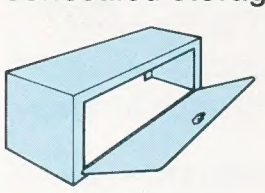

Model	Dimensions-Inches Height	Length	Depth	Ship Wt. Lbs.
8141	13	42	15	37
8131	13	36	15	33

Wheel Well Base Frame NEW!

Same as Wheel Well Base Cabinet, but without door. The retainer lip holds items in place.

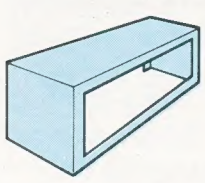

Model	Dimensions-Inches Height	Length	Depth	Ship Wt. Lbs.
8140	13	42	15	24
8130	13	36	15	22

...."The Professionals' Choice"

Organize your van with space-efficient Weather Guard® van storage systems

Full-Size Van (GMC/Chevy, Ford, Dodge)

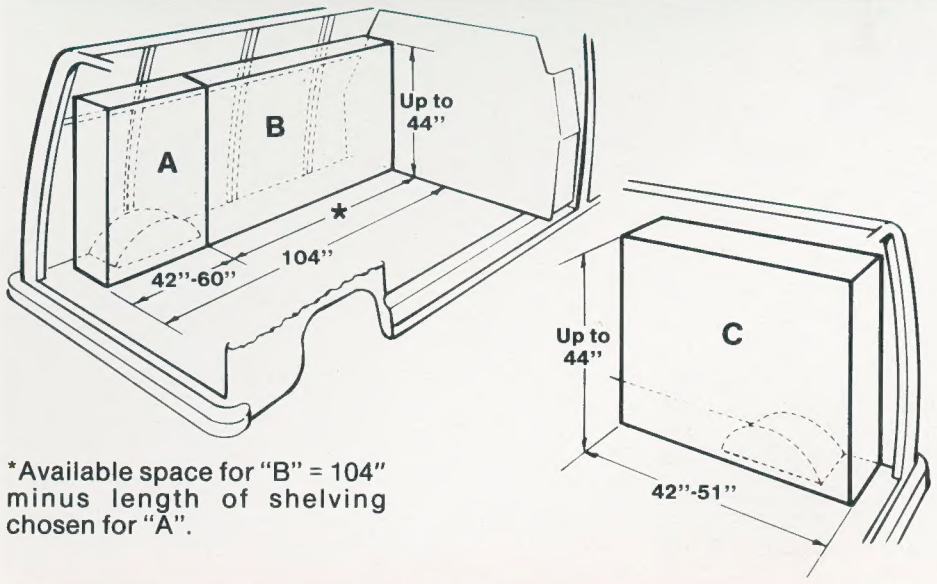

*Available space for "B" = 104" minus length of shelving chosen for "A".

Short Wheel Base Vans (GMC/Chevy, Ford, Dodge)

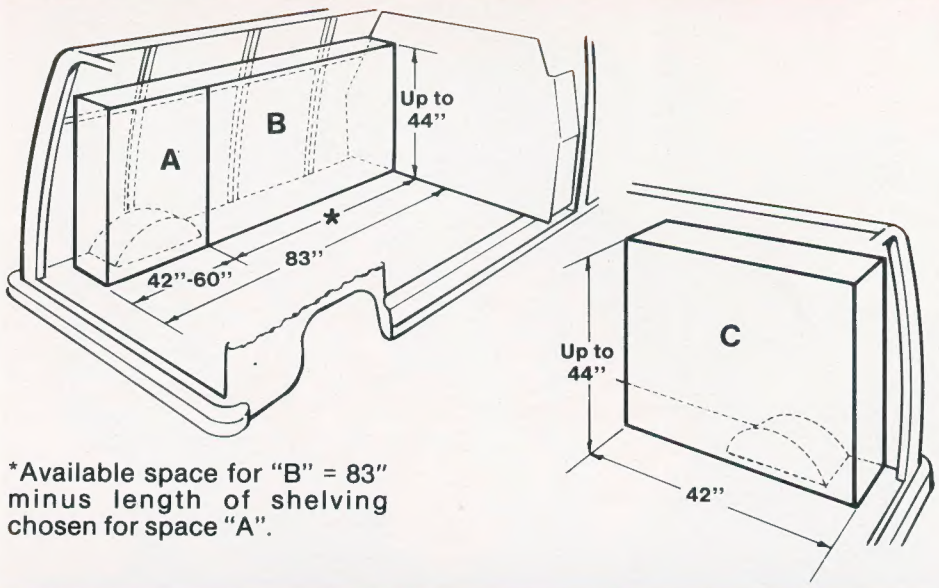

*Available space for "B" = 83" minus length of shelving chosen for space "A".

GMC/Chevy Mini Van (Astro, Safari)

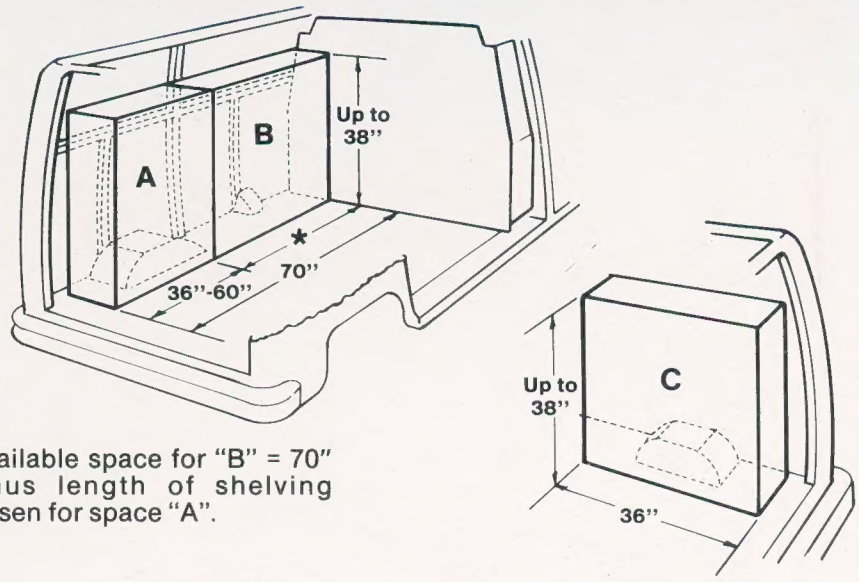

*Available space for "B" = 70" minus length of shelving chosen for space "A".

Custom design your own van interior package using the handy interior layout guidelines below.

Here's How: Start with space "A". Choose a storage unit length within the dimensions listed below for "A".Then, subtract the length of "A" from the overall cargo area length (listed below) to get the amount of available space for "B". Space "C" is on the passenger's side of van. ***NOTE:*** When measuring van to select shelving, care must be taken to compensate for any obstructions that protrude into the van's cargo area. When using stacking shelf units, subtract 3" from combined shelf heights to allow for the base unit's 3" shelf lip.

Ford Mini Van (Aerostar)

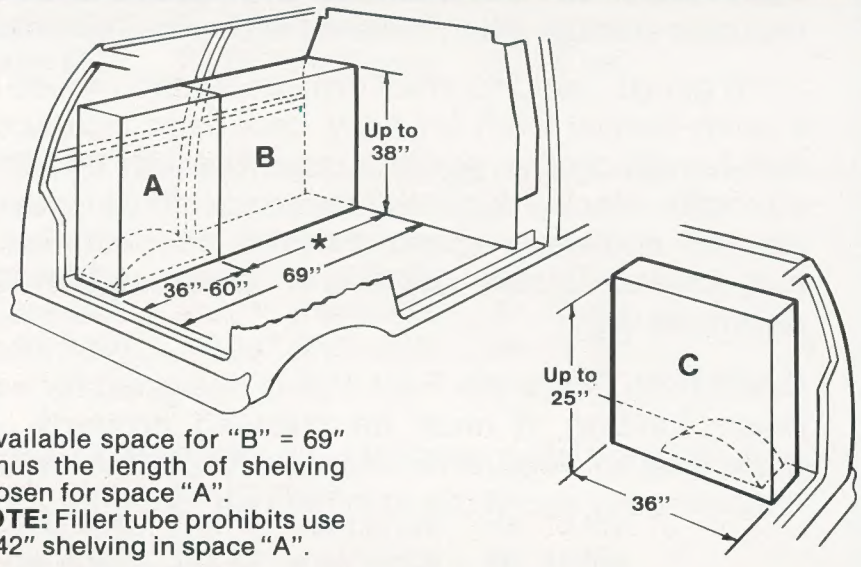

*Available space for "B" = 69" minus the length of shelving chosen for space "A".
NOTE: Filler tube prohibits use of 42" shelving in space "A".

Dodge Chrysler Mini Van (Caravan, Voyager)

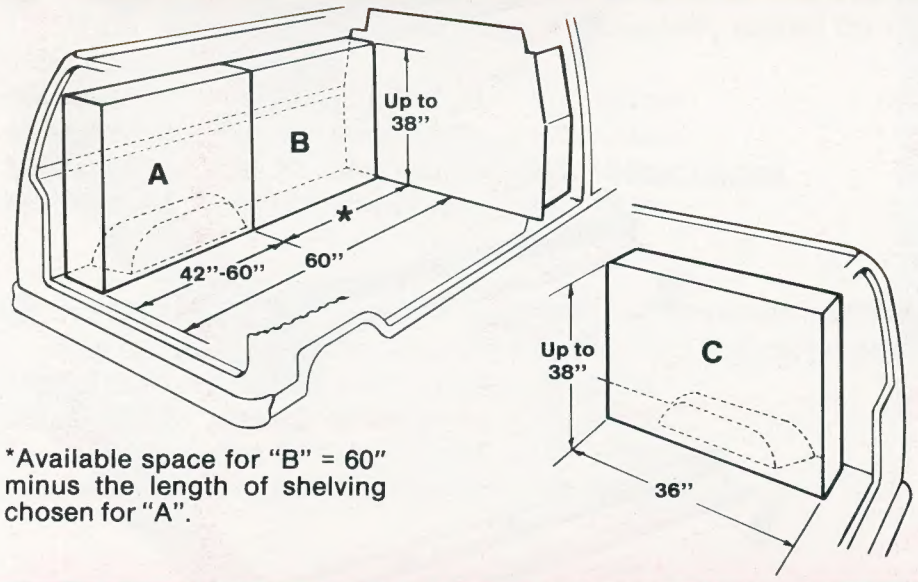

*Available space for "B" = 60" minus the length of shelving chosen for "A".

Toyota Mini Van

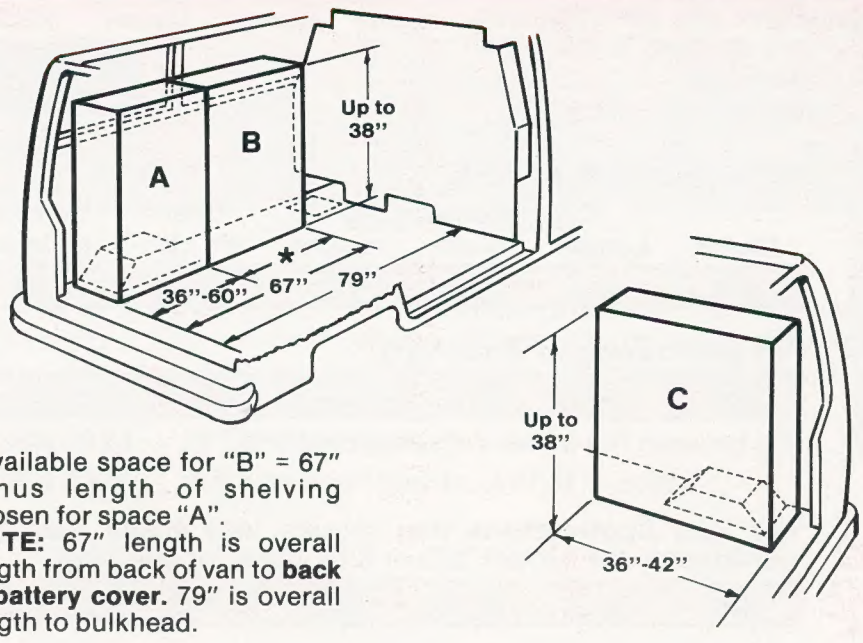

*Available space for "B" = 67" minus length of shelving chosen for space "A".
NOTE: 67" length is overall length from back of van to **back of battery cover.** 79" is overall length to bulkhead.

Lockable Cabinet NEW!

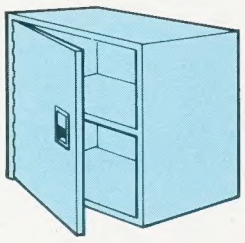

Protect valuables against pilferage with lockable storage. Mounts to floor, Wheel Well Frame or Base Shelf Units. Comes with center shelf.
Model 8311 ... 18" × 18" × 12" ... Wt. 28 lbs.

4 and 5 Shelf Rack Units NEW!

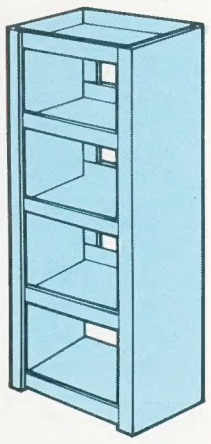

Only 18" long! These versatile shelf units fit nicely into spaces too small for longer shelving. Provide extra storage space between Base Units and Bulkheads. Adjustable shelves have 1" lips to keep items in place.

Model	Dimensions-Inches Height	Length	Depth	No. of Shelves	Ship Wt. Lbs.
8314	30	18	12	4	22
8415	44	18	12	5	26

Jumbo Drawer Units NEW!

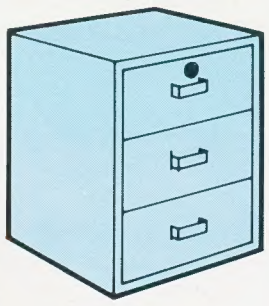

Big 4½" H × 11⅞" D × 16⅜" W drawers provide lockable, concealed storage for large tools and parts. Unit can be mounted to floor, Wheel Well Base Frames and Cabinets, or on one another. Individual slide latches hold each drawer closed while vehicle is moving. Both cabinets are 18" W × 12" D.

Model	No. of Drawers	Height	Ship Wt. Lbs.
8902	2	12.25	27
8903	3	18"	39

Catalog File Units NEW!

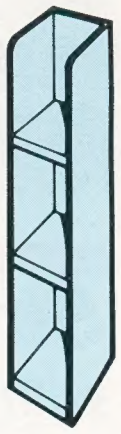

Organizes binders, parts and repair manuals and catalogs. Only 6" wide! Fits nicely against other Weather Guard® components and in small spaces.
Model 8361 ... 36" × 6" × 12" ... Wt. 16 lbs.

Work Top NEW!

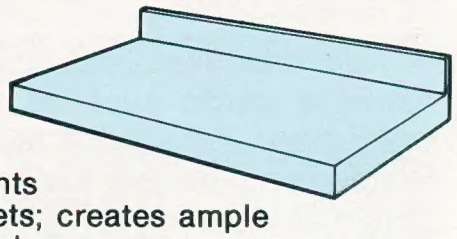

Rigid 16-gauge steel work surface mounts to top of other Weather Guard® components such as Drawer Units or Cabinets; creates ample work area for assembly/repair work.
Model 8867 ... 42" L × 18" D ... Wt. 17 lbs.
Model 8869 ... 36" L × 18" D ... Wt. 15 lbs.

Between The Seat Storage Box NEW!

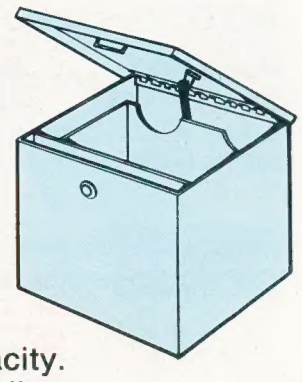

Provides convenient, lockable storage space for valuable papers, forms, records, and personal items. Gas spring "pops" the cover open and holds it open for easy access. 1.5 cu. ft. capacity.
Model 8861 ... 13" L × 16" W × 11" H ... Wt. 19 lbs.

Accessory Van Equipment

Spare Tire Chock NEW!

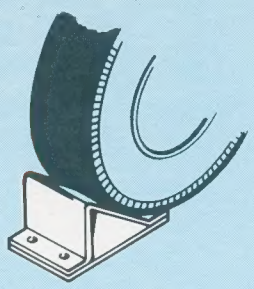

Spare Tire Chock mounts anywhere on the floor to prevent spare tire or other unsecured round objects from rolling around in cargo area.
Model 8863 ... Wt. 2 lbs.

Floor Mat NEW!

Protect van floor surface from damaging spills and bumps with a 48" × 120" Universal Floor Mat. Made of 1/8"-thick, non-slip ribbed vinyl. Trim to fit.
Model 8868 ... Wt. 30 lbs.

Shelf Mat NEW!

Reduce noise from rattling parts and tools with easy-to-install shelf mats. Polyethylene foam material comes rolled in 13¼" W × 150" L. Trim to fit.
Model 8841 ... Wt. 1 lb.

Safety Accessories NEW!

First Aid Kit

Contains: Assorted plastic and flexible adhesive bandages; 1" × 10 yds. Gauze bandage; Gauze pads, Adhesive tape; Triangular Bandage; Cotton; Eye wash; Smelling salts; Antiseptic wipes; Antiseptic and burn ointment; Scissors; Tweezers and more.
Model 8864 ... Wt. 5 lbs.

Fire Extinguisher

Multi-purpose, 2½-lb. dry chemical fire extinguisher is rated to fight A, B, and C class fires. Mounting bracket is included.
Model 8866 ... Wt. 6 lbs.

Safety Reflector Kit

Contains three fluorescent and reflective Day/Night safety triangles. Warns on-coming traffic of stopped or disabled vehicle. Easy to assemble — just snap together!
Model 8865 ... Wt. 11 lbs.

Strong Boxes

with up to 8.8 cu. ft. of storage capacity

Add maximum security inside your van. Ideal for small, valuable cargo such as electronic test gear, or Cable TV equipment. All-welded steel construction combined with the Watchman II double-lock system and special ¼"-thick security shield all around the top of the box gives an extra measure of protection against theft. (Padlocks are not included.)

***NOTE:** Designed for interior use only.*

Model 9032
32" × 19" × 14"
4.9 cu. ft.
Wt. 85 lbs.

Model 9042
42" × 19" × 19"
8.8 cu. ft.
Wt. 113 lbs.

ARMOR-TUF™ BONDED COATING

Pack Rat

Store heavy items at the lowest possible center of gravity.

Pack Rats help assure safer, more secure storage ... and better vehicle handling. Low-profile design keeps heavy and small items where you can easily find them without "digging." 12 gauge steel diamond-plate top surface is angle and channel reinforced internally so you can walk on it or stack materials on it. Pack Rat also provides concealed, lockable storage when covered with a mat or carpet.

16 gauge, welded-steel drawer is held closed by a push-button latch for easy, one-hand operation. Full-length drawer partitions are welded for added strength. Heavy-duty ball bearing slides provide smooth and easy operation even when drawer is fully loaded. Drawer depth is 5". Distance between partitions is 9".

CAUTION: Since the Pack Rat is designed for very heavy loading, it must be installed properly. All mounting holes must be used. Failure to mount this unit correctly could result in damage or injury.

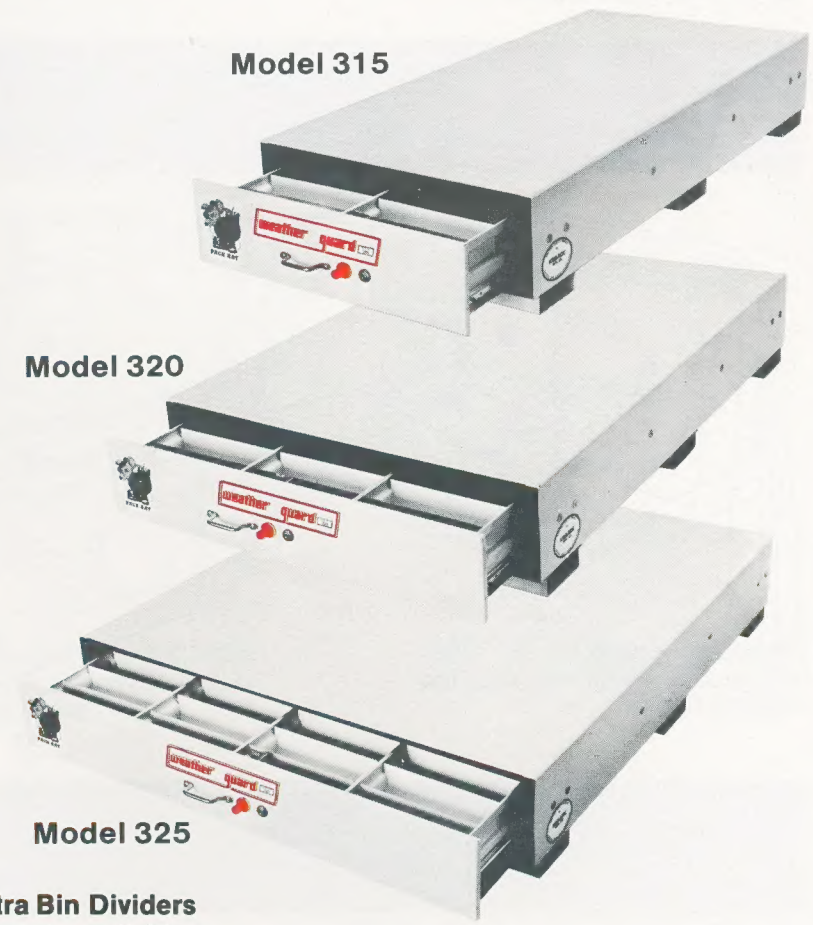

Extra Bin Dividers
Steel bin dividers are shipped 6 per package.
Model 300 ... Wt. 6 lbs.

ARMOR-TUF™ BONDED COATING

For Standard Size Vans

Model	Dimensions-Inches Length	Width	Height	Ship Wt. Lbs.	Dividers Included
325	50.0	43.5	8.75	300	24

For Standard and Mini-Vans

320	50.0	33.75	8.75	250	18

Fits between the wheel wells on most Minis.

For Van Applications that require less space than that provided by the Model 320 or 325. Ideal for stacking.

315	50.0	23.75	8.75	190	12

Customize Your Weather Guard® Shelf Units With These Easy-To-Install Shelf Accessories!

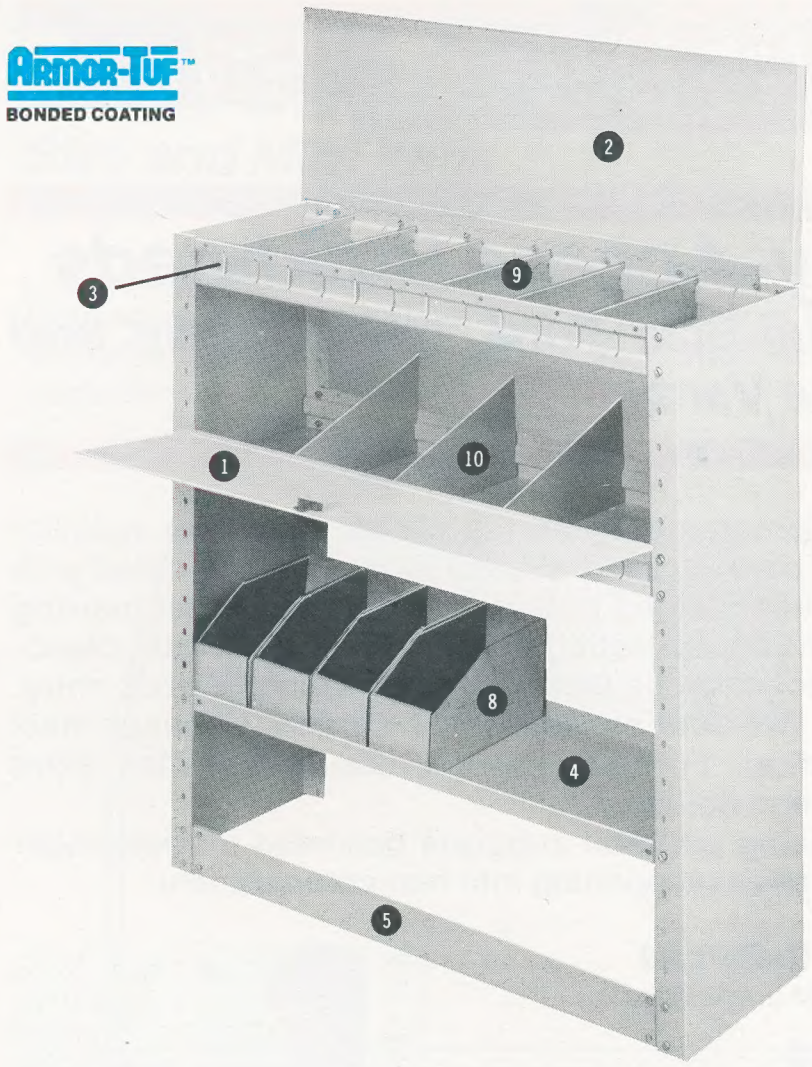

❶ *Shelf Door and Back Panel*

Turns any shelf unit into lockable cabinet space to discourage pilferage. Locking slide latch and full-length piano hinge. 12 gauge steel door and Lexan® back panel. Door opens to a big 10".

Model 8536 ... for 36" shelf units ... Wt. 12 lbs.
Model 8542 ... for 42" shelf units ... Wt. 14 lbs.
Model 8551 ... for 51" shelf units ... Wt. 17 lbs.
Model 8560 ... for 60" shelf units ... Wt. 20 lbs.

❷ *Shelf Work Cover* 16 gauge hinged shelf cover doubles as handy work area for light repair and assembly.

Model 8236 ... fits 36" shelf units ... Wt. 13 lbs.
Model 8242 ... fits 42" shelf units ... Wt. 15 lbs.
Model 8251 ... fits 51" shelf units ... Wt. 17 lbs.
Model 8260 ... fits 60" shelf units ... Wt. 19 lbs.

❸ *Extra Shelves* For 14"-deep models only. 3" lip with 3" on-center divider slots.

Model 8036 ... fits 36" shelf units ... Wt. 13 lbs.
Model 8042 ... fits 42" shelf units ... Wt. 15 lbs.
Model 8051 ... fits 51" shelf units ... Wt. 18 lbs.
Model 8060 ... fits 60" shelf units ... Wt. 20 lbs.

❹ *Flat Shelves* 1" lip can be turned up or down. Allows for larger opening between shelves. Particularly suited for use inside cabinets.

Model 8811 ... fits 36" shelf units ... Wt. 12 lbs.
Model 8812 ... fits 42" shelf units ... Wt. 13 lbs.
Model 8813 ... fits 51" shelf units ... Wt. 16 lbs.
Model 8814 ... fits 60" shelf units ... Wt. 18 lbs.

❺ *Retainer Lip* Works as a kick plate and prevents materials that are stored on the floor from rolling into van cargo area.

Model 8801 ... fits 36" shelf units ... Wt. 5 lbs.
Model 8802 ... fits 42" shelf units ... Wt. 6 lbs.
Model 8803 ... fits 51" shelf units ... Wt. 7 lbs.
Model 8804 ... fits 60" shelf units ... Wt. 8 lbs.

❻ *Parts Cabinets* Mount on top or beneath Shelf Units. Mount drawers so they slope slightly to prevent spillage while vehicle is moving.

Model	Dimensions-Inches Height	Length	Depth	No. of Drawers	Ship Wt. Lbs.	No. of Dividers
8906	4	33.75	11.62	6	18	12
8908	7.375	22.75	11.62	8	24	24
8909	11	17.125	11.62	9	28	24
8918	11	33.75	11.62	18	54	36

❼ *Parts Boxes* Keep small parts organized and readily available. Convenient handle allows you to take parts right to the jobsite. All models are 18" × 12" × 3" and weigh 8 lbs.

Model 8912 ... 12 Compartment
Model 8924 ... 24 Compartment
Model 8930 ... Adj. Compartments, with 9 dividers

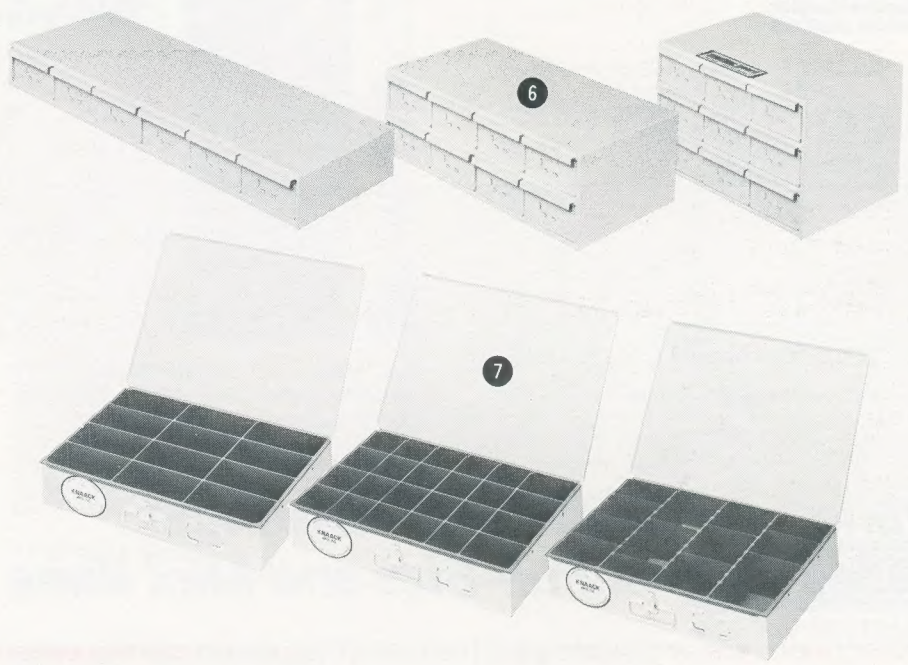

❽ *Bin Boxes* Durable corregated for storing bulk quantities of small items. Shipped 25 per box.

Model 8125 ... Wt. 6 lbs.

Extra Bin Dividers Form additional compartments in shelving units with these straight or sloped dividers. For use in 10" and 14" deep shelves only. Shipped 6 per box.

❾ *Straight Bin Dividers*

Model 8110 ... 10" ... Wt. 4 lbs.
Model 8114 ... 14" ... Wt. 5 lbs.

❿ *Sloped Bin Dividers*

Model 8111 ... 10" ... Wt. 3 lbs.
Model 8115 ... 14" ... Wt. 5 lbs.

Shelf Back Panels *(Not Shown)*

Attaches to back of shelf units. Prevents items from falling behind shelving. Made of durable Lexan®. Trim to fit.

Model 8832 ... 24" × 60" ... Wt. 3½ lbs.

Stacking Brackets *(Not Shown)*

Allow stacking of Base Shelf Units in Cube Van applications. Shipped 2 per package. Assembly hardware and instructions included.

Model 8116 ... Wt. 4 lbs.

weather guard®

Easy-Access Bulkheads
for Full-Size Ford, GMC/Chevy and Dodge Vans.

Full diamond-punched top allows maximum visibility into rear cargo area. Bulkhead is completely coated with Armor-Tuf™ Bonded Polyester Coating to resist marring and provide long-lasting good looks. Full-length, piano-hinged door can be locked to avoid unauthorized entry. Includes two door pockets. Fully-welded, 16 gauge steel construction. Formed channel design provides extra strength and rigidity.

Stabilizing partition supports bulkhead on passenger side and seals off opening into rear compartment.

3-Piece Bulkhead
Model 86000 ... Wt. 82 lbs.

ARMOR-TUF™ BONDED COATING

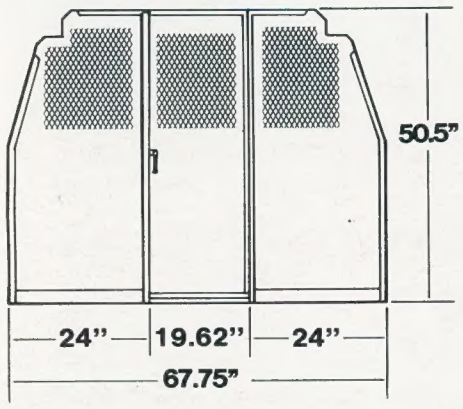

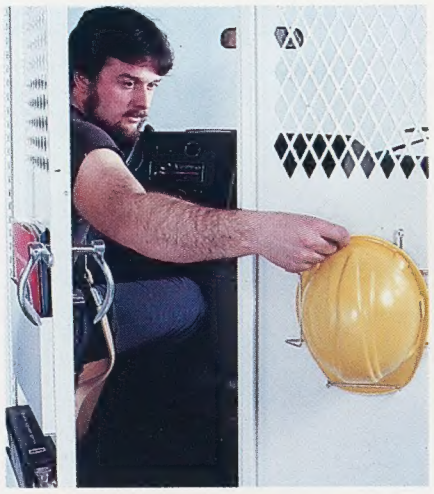

Lockable, full-length door allows easy access into rear cargo area from driver's compartment.

Panels for Driver and Passenger Sides Only of Full-Size and Mini Vans

Protects drivers or passengers from shifting cargo during emergency stops.

Driver's Side Panel for Full-Size Vans
Model 86001...50.5"H x 24"W... Wt. 23 lbs.

Driver's Side Panel for Mini Vans
Model 87001... 46"H x 24"W... Wt. 19 lbs.

Passenger's Side Panel for Full-Size Vans
Model 86002... 50.5"H x 24"W... Wt. 28 lbs.

Passenger's Side Panel for Mini Vans
Model 87002... 46"H x 24"W... Wt. 19 lbs.

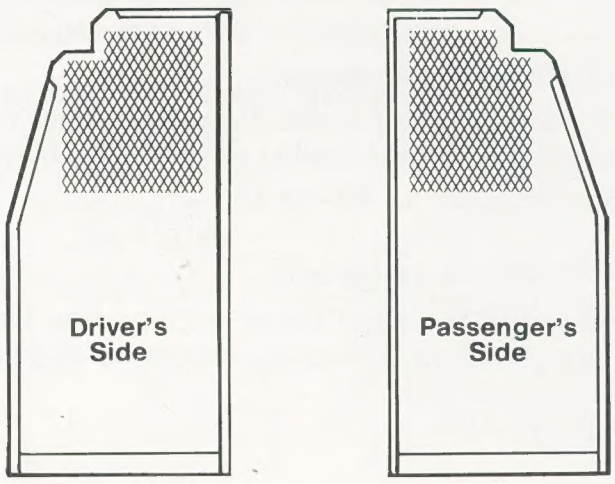

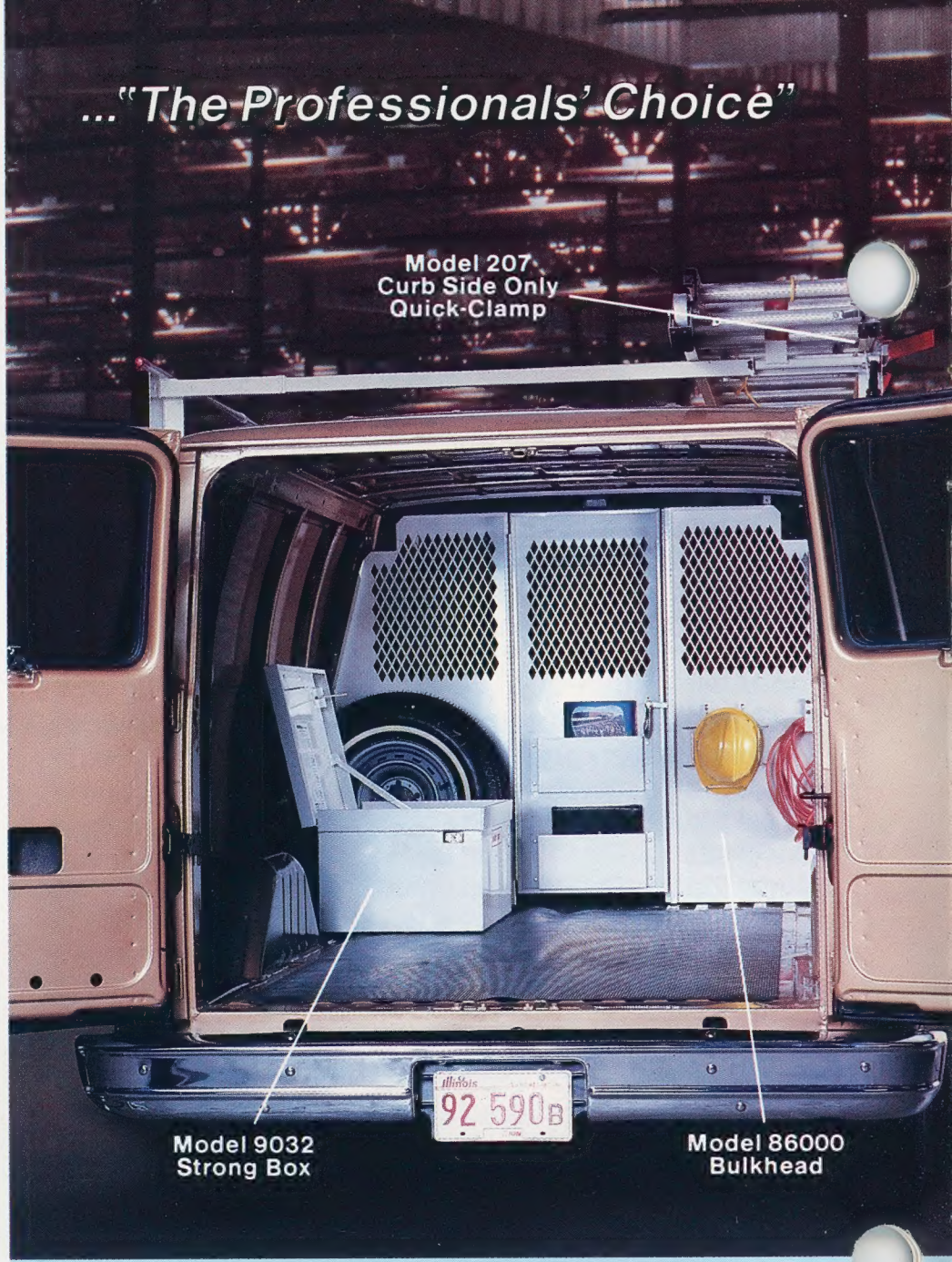

Bulkhead Accessories

Hard Hat Rack
Provides convenient storage for hard hats. Mounts to bulkhead or other flat surfaces. Wire rack can be adjusted to accommodate any size hat.
Model 8875 ... Wt. 2 lbs.

Extension Cord Bracket
Secure extension cords and other cord items neatly out of the way with this convenient bracket. Bolts to bulkhead or other flat surfaces. Shipped 3 per carton.
Model 8873 ... Wt. 2 lbs.

Head Rest
Provides added comfort for driver. Mounts easily to bulkhead.
Model 8874 ... Wt. 3 lbs.

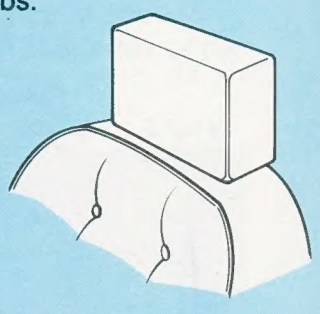

Window Cover Kits for Bulkheads
Retain heating and air conditioning in driver's compartment with Lexan® window covers. Allows complete visibility into rear compartment. Fits all van bulkheads. Trim to fit.
Model 8832 ... 24" × 60" ... Wt. 3-1/2 lbs.

Spare Tire Mounting Bracket
Universal Spare Tire Mounting Bracket allows you to re-mount your spare tire anywhere in the van.
Model 8862 ... Wt. 2 lbs.

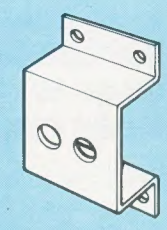

1-Pc. Bulkheads for Full-Size and Mini Vans

Weather Guard® 1-Pc. bulkheads are custom designed to fit snugly into specific makes of vans. Ideal for those who don't need access to the rear from the driver's compartment.

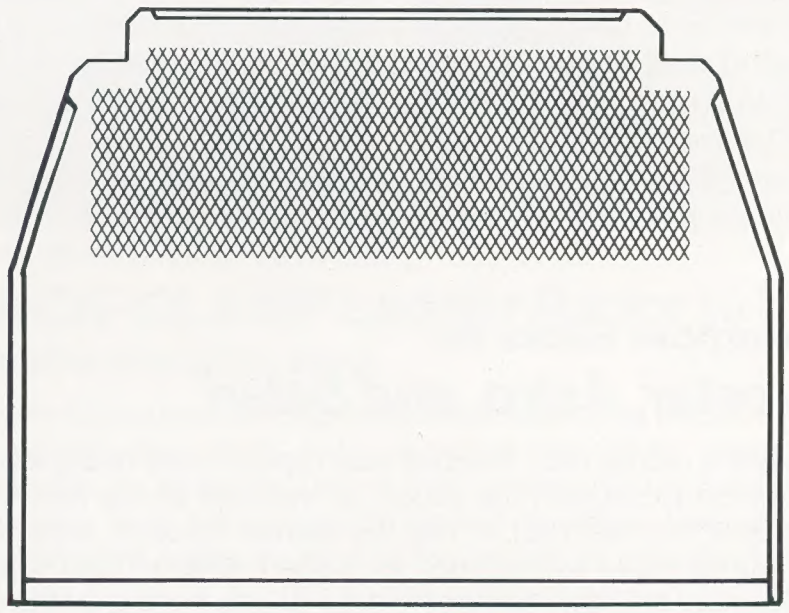

Model	Fits	Dimensions - Inches Height	Dimensions - Inches Width	No. of Pockets	Ship Wt. Lbs.
86010	G.M.*	53	70	2	87
86020	Dodge*	51	71.75	2	87
86030	Ford*	53	72	2	87
87010	G.M.**	47.75	67.5	2	73
87020	Dodge**	47	60.75	2	73
87030	Ford**	47.5	61	2	73
87040	Toyota**	48	55.75	3	73

*Full-Size Van
**Mini Van

ARMOR-TUF™
BONDED COATING

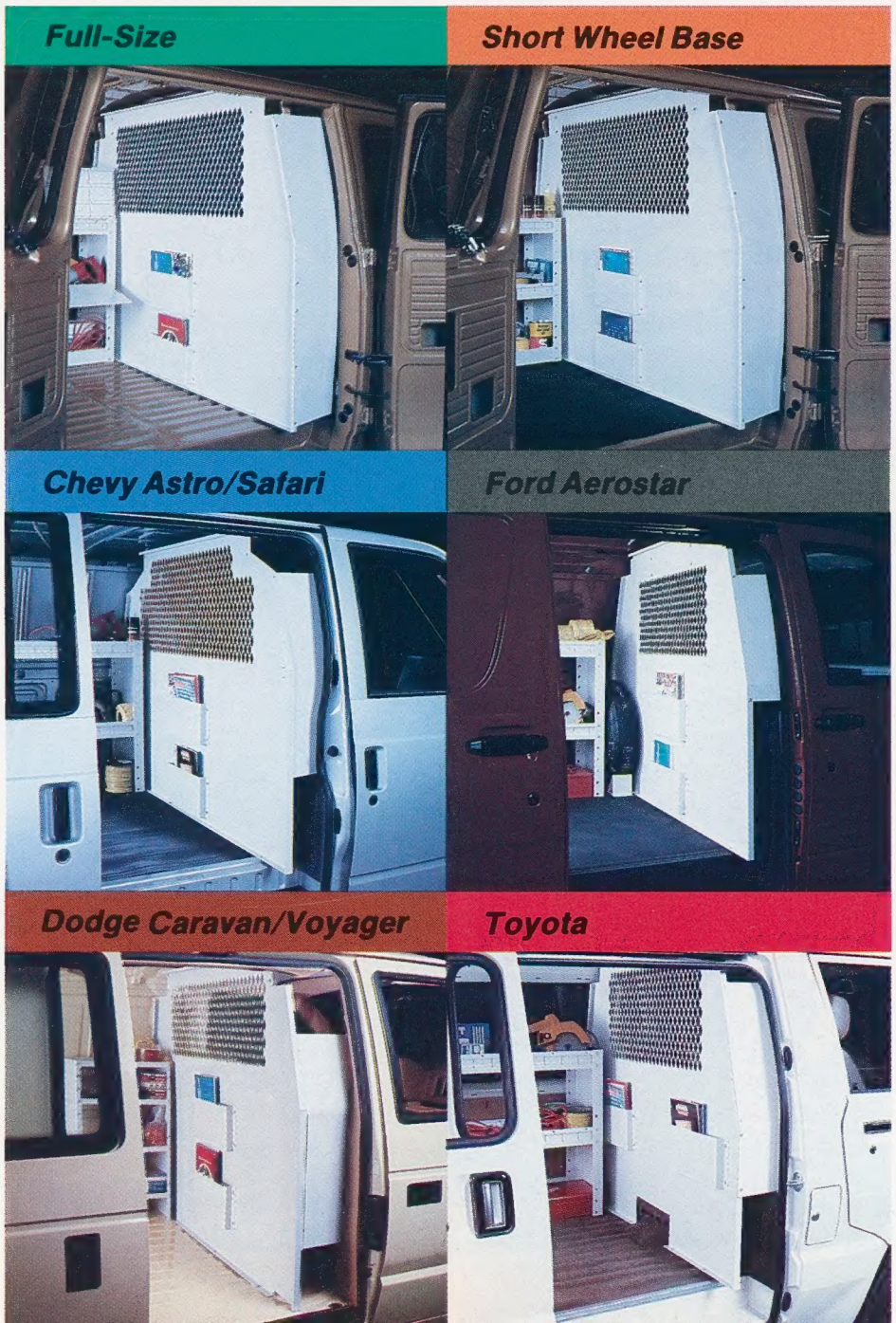

Van Window Screen

Covers rear or side windows. Provides additional security for cargo area. Two per carton. Armor-Tuf™ Bonded Polyester Coating.
Model 8602 ... Wt. 12 lbs.

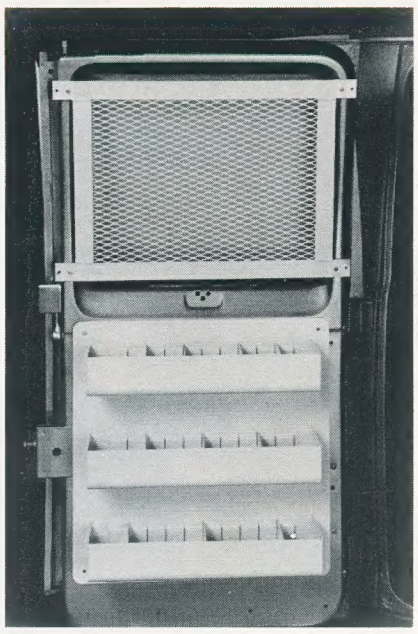

Door Tray

Ideal for storing small tools and parts that require ready access. Makes use of otherwise wasted space. Fasten to rear or side cargo door with hinges. Three trays are 18-1/8"L × 4-3/4"D × 3-1/8"H. Unit comes with 12 dividers that are adjustable on 1-1/2" centers.
Model 8466 ... Wt. 22 lbs.

weather guard®

All-Purpose Racks for Full-Size and Mini Vans

Weather Guard® all-Purpose Racks provide a convenient place to carry ladders and other long items without jamming them into van interiors. These racks feature durable Armor-Tuf™ Bonded Polyester Coating to stand up to years of rough service.

Best of all, Weather Guard® racks are now available in clamp-on and bolt-down styles for mini vans!

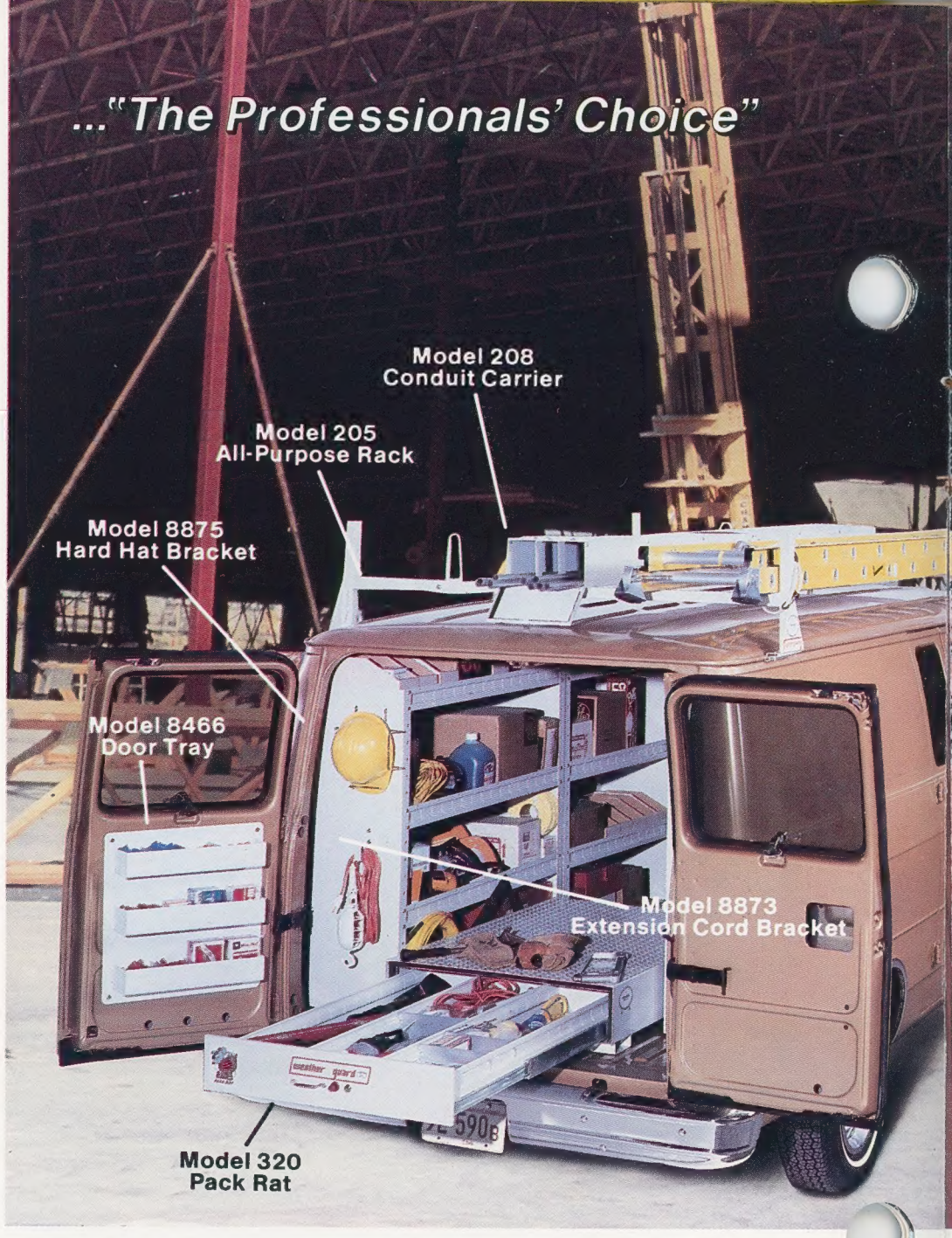

All-Purpose Racks for
Aerostar, Astro, and Safari

Here's a ladder rack that has been specifically designed and engineered to support the weight of the load on the reinforced corners of the van roof — not the center. Special, extra-wide base plates mold to the roof for added support and a clean appearance. Silicone sealant is provided to form a water-tight seal around mounting holes. In addition, thick weather-stripping cushions the load and provides an extra barrier against water seepage.

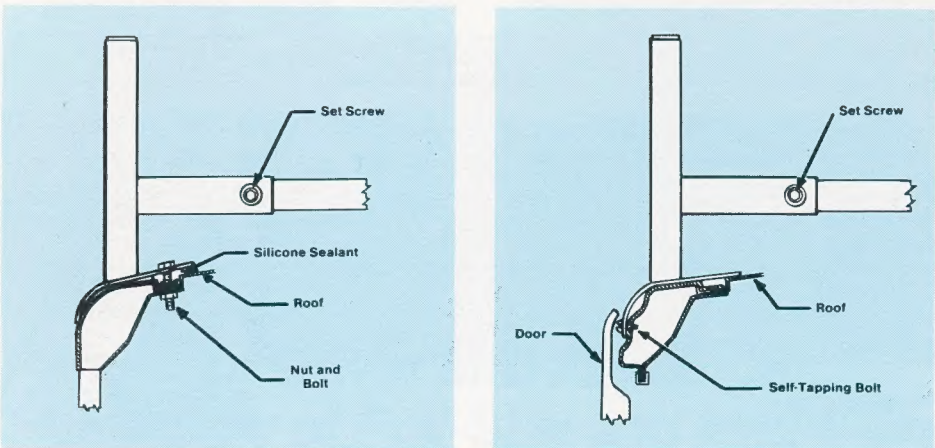

Specially designed base puts weight over reinforced roof corners. Mounting holes are concealed by either front door frame or roof channels.

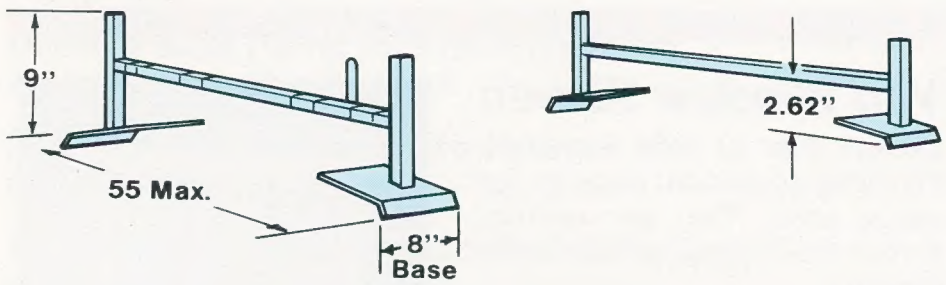

Aerostar, Astro, and Safari rack includes tie down cleets and easy, step-by-step mounting instructions.
Model 203 ... Wt. 30 lbs.

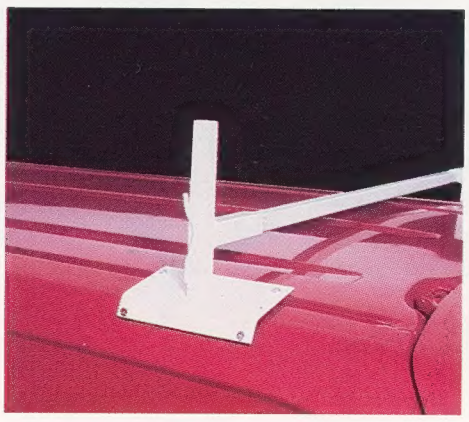

Bolt Down Type

All-Purpose Racks for
Full-Size and Mini Vans with Rain Gutters

Extra-wide mounting bases spread weight evenly along gutters and clamp securely to prevent racks from rocking back and forth when loading and unloading ladders and materials. These gutter mounted racks require no holes through the roof and are quick and easy to install.

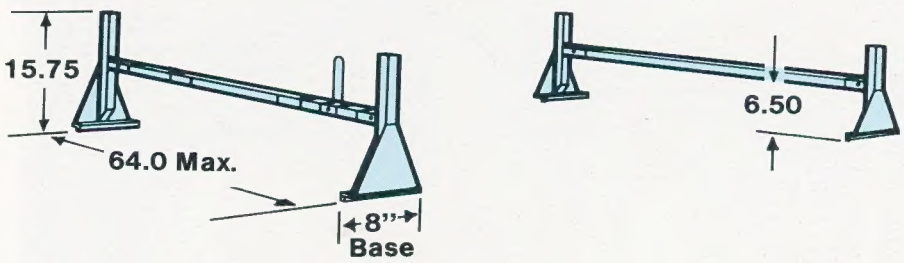

Clamp-on rack includes tie down cleets on end posts and cross members.
Model 205 ... Wt. 42 lbs.

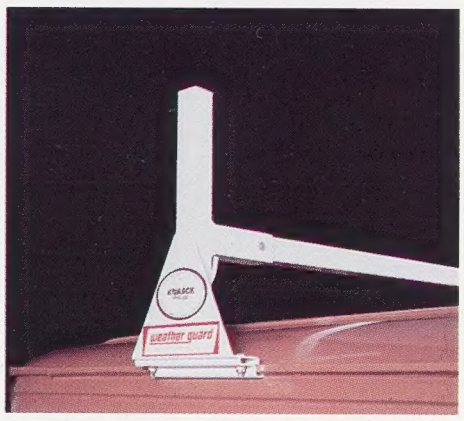

Clamp Type

Only Weather Guard offers the QUICK-CLAMP

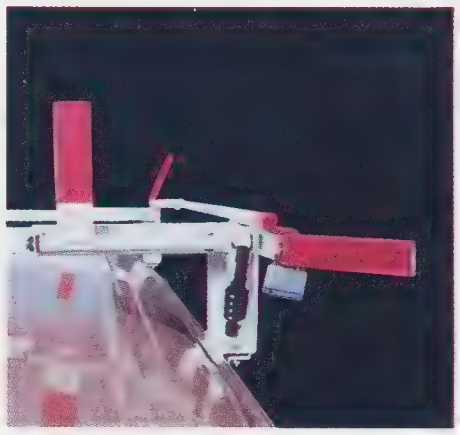

The quick and easy way to secure ladders

QUICK-CLAMP Ladder Racks for Full-Size and Mini Vans

Quick-Clamp racks feature lockable clamping of ladders on both street and curb side. Smooth-operating clamping mechanism is activated by a gas spring which holds the mechanism in a fully open or closed position. Gas springs apply constant pressure against the ladder to prevent shifting and easily adjusts to accommodate different types of ladders.

Full-length round tubing on both sides of the rack are "hooked" on the front and flared to the outside to make it easy for one man to load and unload ladders and materials.

QUICK-CLAMP Racks for Aerostar, Astro, and Safari NEW!

Specially engineered mounting pads mold to the contour of the roof and bolt directly to the internal reinforcements. (See diagram for Model 203.) Features Quick-Clamp on curb side only for craftsmen who only carry one ladder at a time and need unrestricted area for other materials.

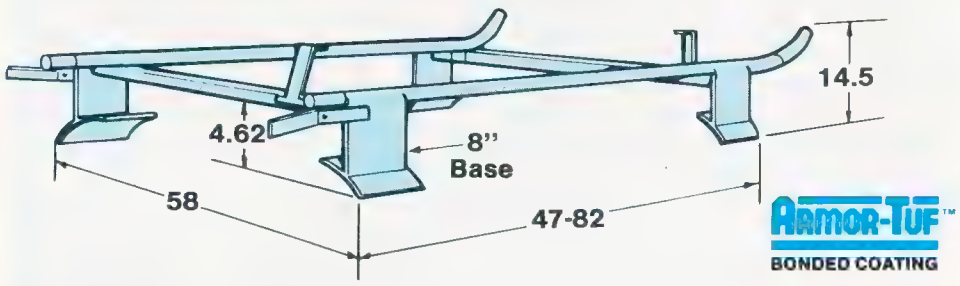

Rack comes complete with easy, step-by-step instructions.
Model 204 ... Wt. 48 lbs.

QUICK-CLAMP Racks for Full-Size and Mini Vans with Rain Gutters

All the features you need in a ladder rack: Full-length side rails, extra-wide mounting bases, and lockable clamping. Padlocks not included.

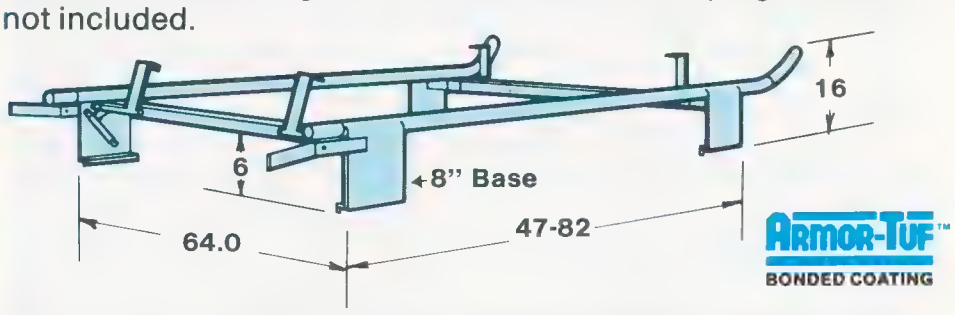

Rain Gutter Mounting Rack with Quick-Clamp feature on both street and curb sides.
Model 206 ... Wt. 87 lbs.
Rain Gutter Mounted Rack with Quick-Clamp feature on curb side only.
Model 207 Wt. 58 lbs.

Accessories for Van Racks

Accessory Conduit Carrier

Fully-enclosed lockable storage for plenty of conduit. Fits all van rack models.
Model 208 ... Wt. 75 lbs.

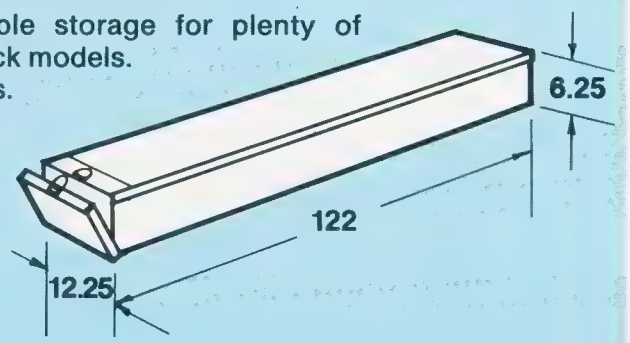

Accessory Roller

For easier one-man loading and unloading of ladders and materials. Fits 205, 207 van rack models.
Model 2051 ... Wt. 7 lbs.

Accessory Half Sets

For flexible, short or heavy loads that require extra support. Comes with two base supports and one cross member.
Half Set for Model 203
Model 2035 ... Wt. 12 lbs.
Half Set for Model 205
Model 2055 ... Wt. 26 lbs.

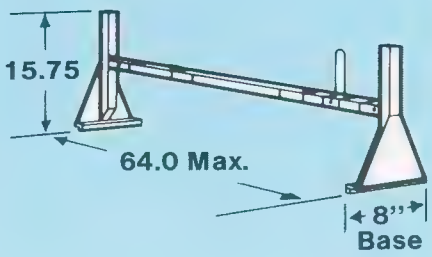

weather guard®

Full-Size Van
(GMC/Chevy, Ford, Dodge)

Get the most out of your full-size van with Weather Guard® van interior packages. These highly efficient and practical interiors were designed by professionals . . . for professionals as a way to store, organize, transport and protect valuable tools, parts and equipment.

The packages on this page were specifically designed to fit full-size vans. You can order them simply by specifying the package number and the make of your van. All packages are easily installed and come with detailed step-by-step instructions and all assembly hardware.

Model 600-1202
Electronic Service Package

General Service

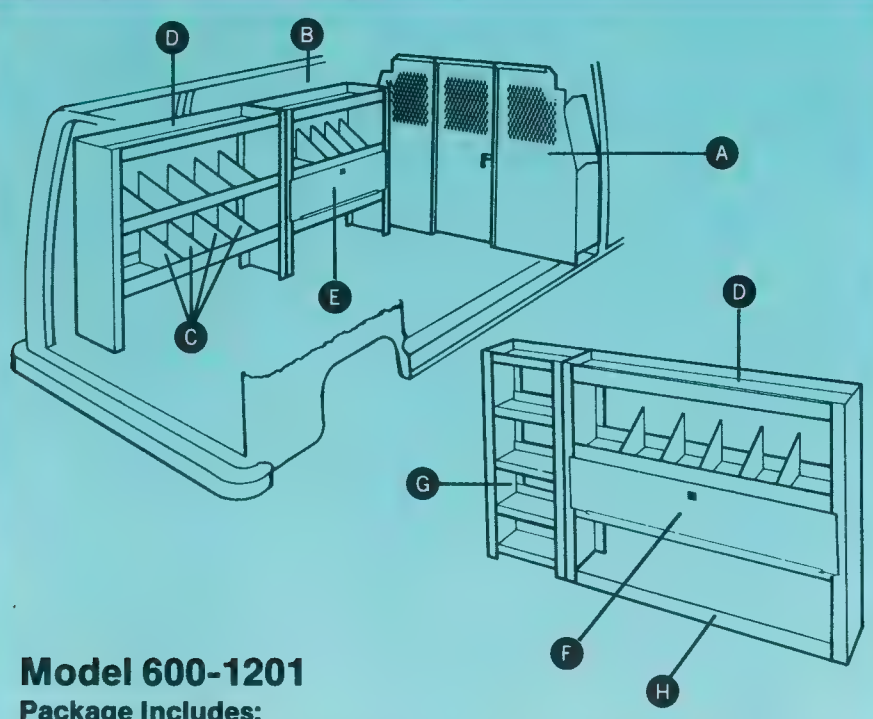

Model 600-1201
Package Includes:

	Qty.	Model #	Description
A	1	86000*	3-Pc. Bulkhead
B	1	8443	Jumbo Shelf Unit
C	3	8115	Bin Dividers (18)
D	2	8453	Jumbo Shelf Unit
E	1	8542	Door and Back Panel
F	1	8551	Door and Back Panel
G	1	8415	5-Shelf Rack Unit
H	1	8803	Retainer Lip

*Single piece bulkheads also available, refer to page 9 for specifications.

Electronic Service

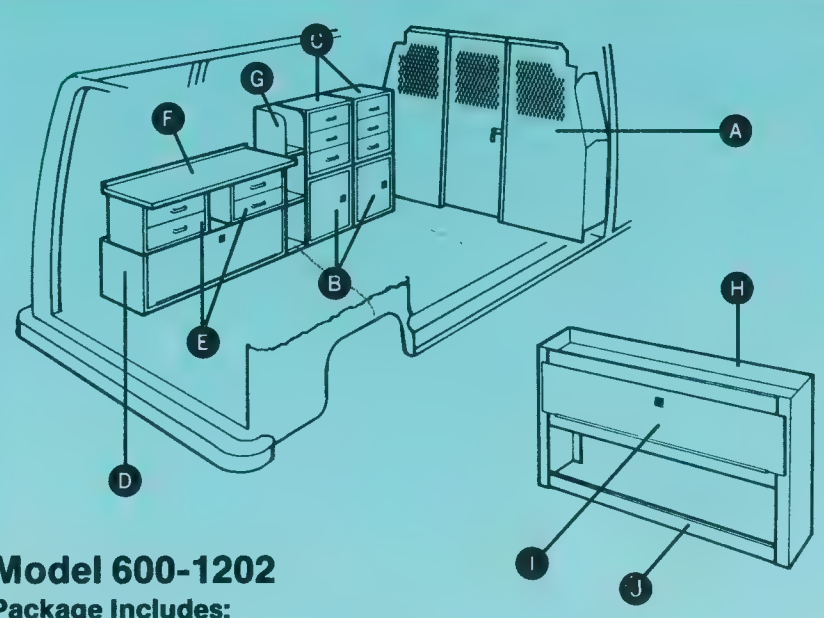

Model 600-1202
Package Includes:

	Qty.	Model #	Description
A	1	86000*	3-Pc. Bulkhead
B	2	8311	Lockable Cabinet
C	2	8903	Jumbo Drawer Units (3D)
D	1	8141	Wheel Well Base Cabinet
E	2	8902	Jumbo Drawer Unit (2D)
F	1	8867	Work Top
G	1	8361	Catalog File Unit
H	1	8352	Base Shelf Unit
I	1	8551	Door and Back Panel
J	1	8803	Retainer Lip

*Single piece bulkheads also available, refer to page 9 for specifications.

Appliance/HVAC Service

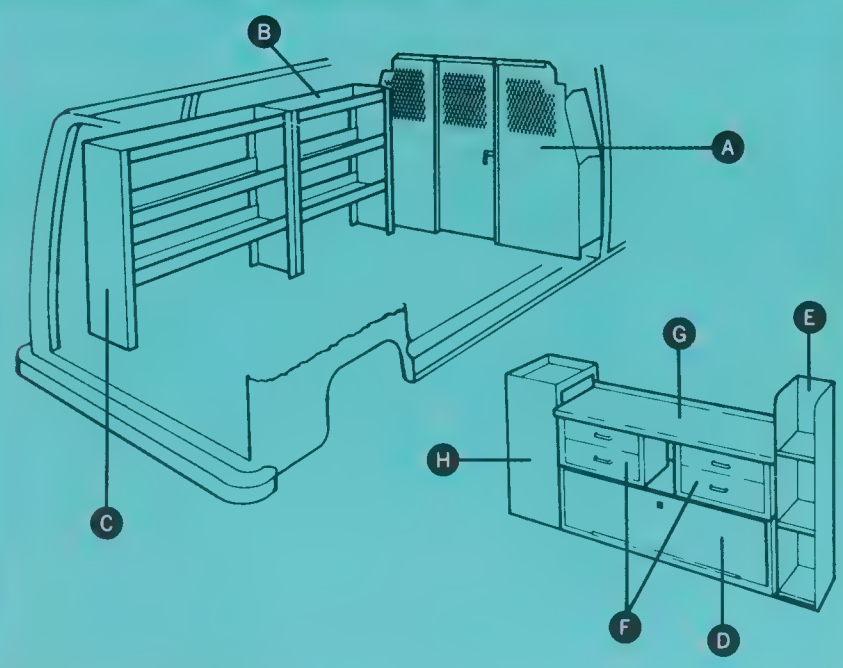

Model 600-1205

Package Includes:

	Qty.	Model #	Description
A	1	86000*	3-Pc. Bulkhead
B	1	8443	Jumbo Shelf Unit
C	1	8453	Jumbo Shelf Unit
D	1	8141	Wheel Well Base Cabinet
E	1	8361	Catalog File Unit
F	2	8902	Jumbo Drawer Unit (2D)
G	1	8867	Work Top
H	1	8314	4-Shelf Rack Unit

*Single piece bulkheads also available, refer to page 9 for specifications.

Cable Communications

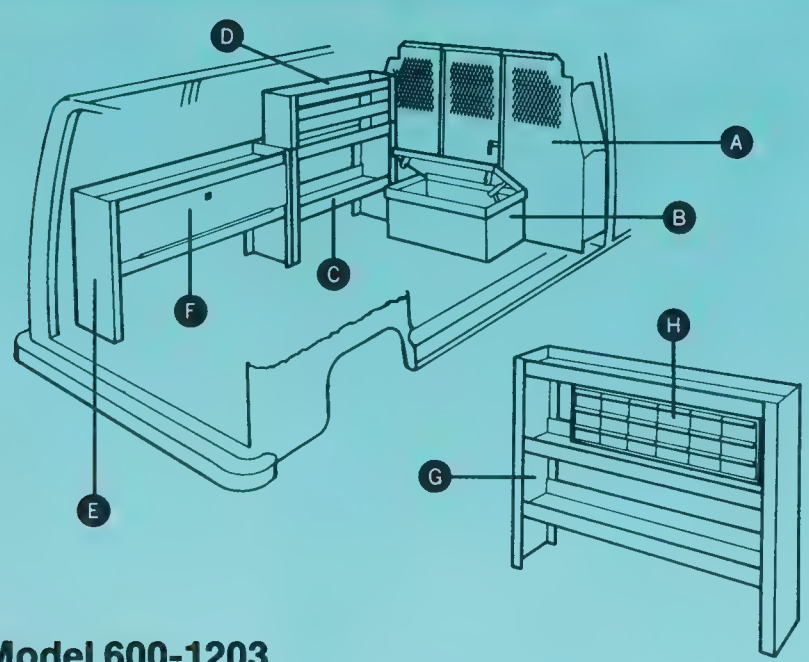

Model 600-1203

Package Includes:

	Qty.	Model #	Description
A	1	86000*	3-Pc. Bulkhead
B	1	9032	Strong Box
C	1	8342	Base Shelf Unit
D	1	8142	Stacking Shelf Unit
E	1	8352	Base Shelf Unit
F	1	8551	Door and Back Panel
G	1	8453	Jumbo Shelf Unit
H	1	8918	18-Drawer Parts Cabinet

*Single piece bulkheads also available, refer to page 9 for specifications.

Utility Service

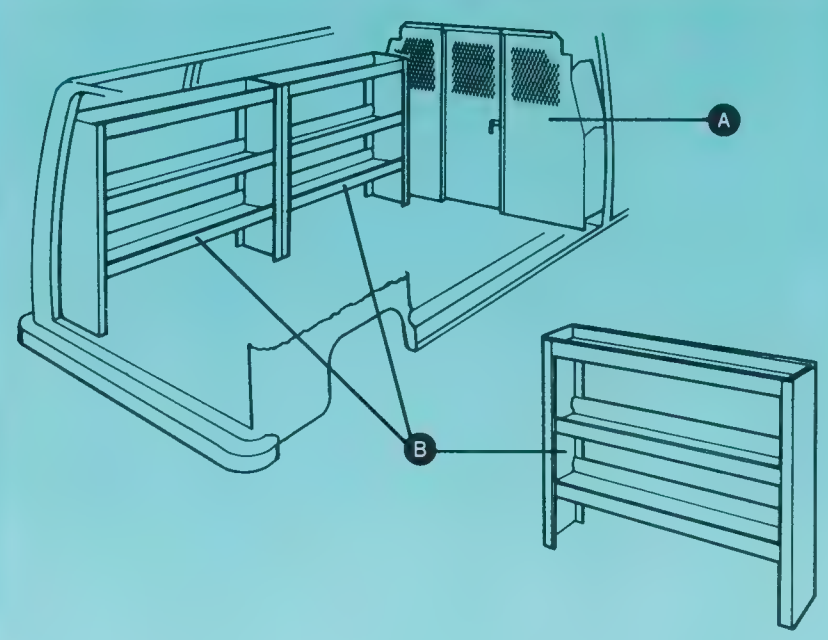

Model 600-1204

Package Includes:

	Qty.	Model #	Description
A	1	86000*	3-Pc. Bulkhead
B	3	8453	Jumbo Shelf Unit

*Single piece bulkheads also available, refer to page 9 for specifications.

weather guard®

Short Wheel Base Vans
(GMC/Chevy, Ford, Dodge)

Weather Guard® storage equipment helps you get the most out of your van's storage area. These highly efficient and practical interiors were designed for professionals . . . by professionals as a way to store, organize, transport and protect valuable tools, supplies and equipment.

The packages on this page were specifically designed to fit short wheel base vans (Ford, GMC/Chevy, and Dodge). You can order them simply by specifying the package number and the make of your van. All packages are easily installed and come with detailed, step-by-step instructions and all assembly hardware.

Model 600-1303
Cable Communications Package

General Service

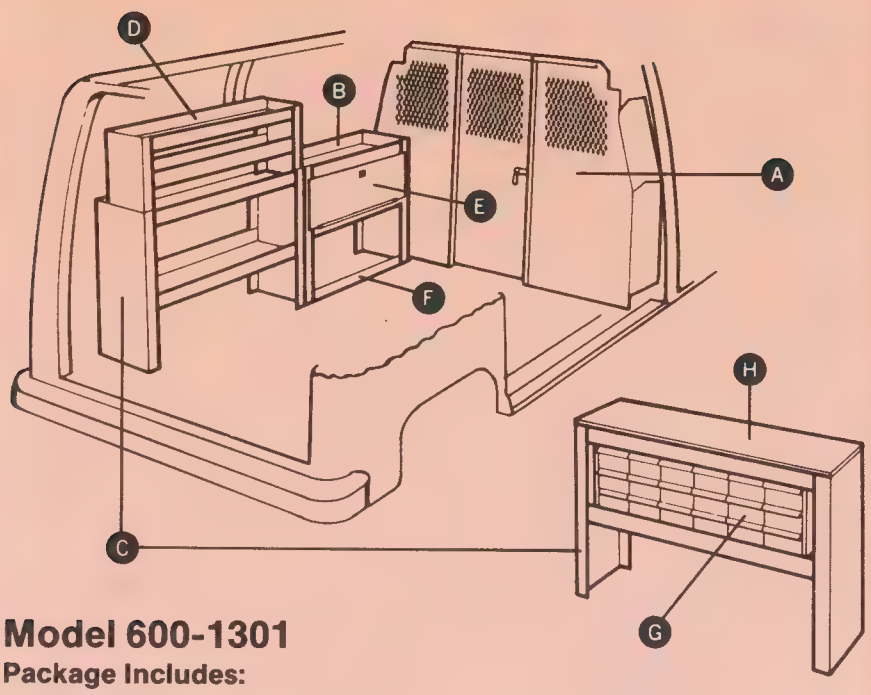

Model 600-1301

Package Includes:

	Qty.	Model #	Description
A	1	86000*	3-Pc. Bulkhead
B	1	8332	Base Shelf Unit
C	2	8342	Base Shelf Unit
D	1	8142	Stacking Shelf Unit
E	1	8536	Door and Back Panel
F	1	8801	Retainer Lip
G	1	8918	18-Drawer Parts Cabinet
H	1	8242	Work Cover

*Single piece bulkheads also available, refer to page 9 for specifications.

Electronic Service

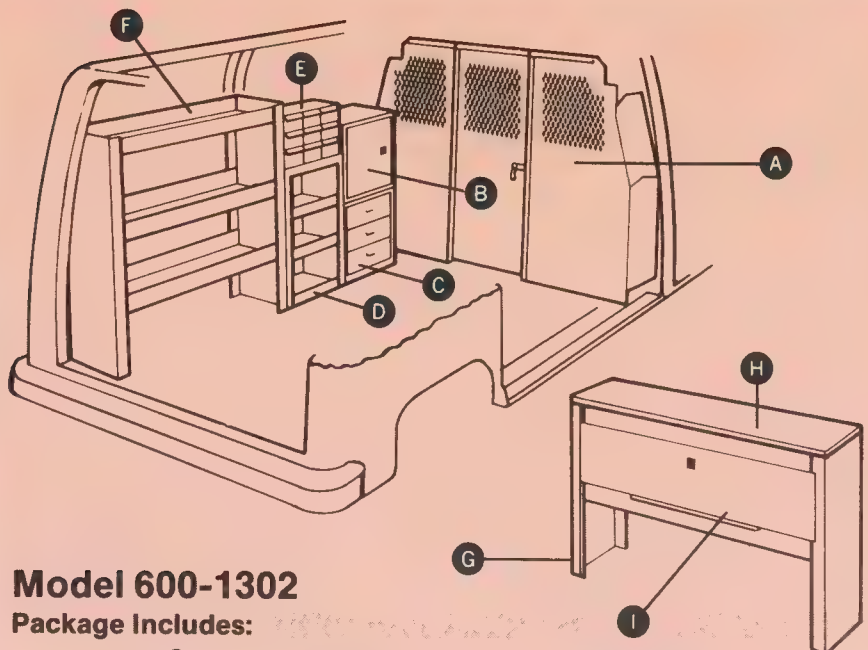

Model 600-1302

Package Includes:

	Qty.	Model #	Description
A	1	86000*	3-Pc. Bulkhead
B	1	8311	Lockable Cabinet
C	1	8903	Jumbo Drawer Unit (3D)
D	1	8314	4-Shelf Rack Unit
E	1	8909	9-Drawer Parts Cabinet
F	1	8443	Jumbo Shelf Unit
G	1	8342	Base Shelf Unit
H	1	8242	Work Cover
I	1	8542	Door and Back Panel

*Single piece bulkheads also available, refer to page 9 for specifications.

Appliance/HVAC Service

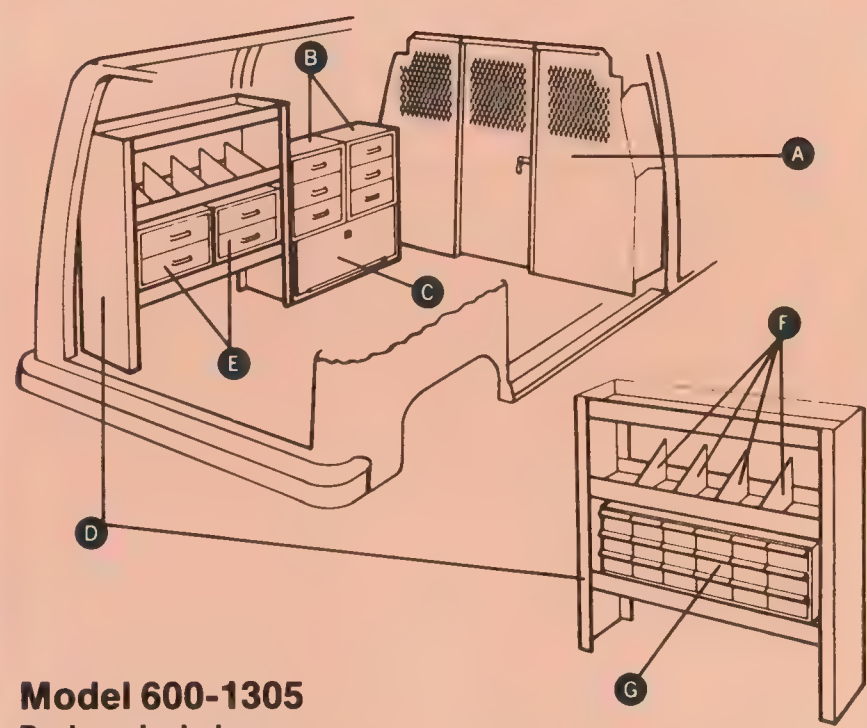

Model 600-1305

Package Includes:

	Qty.	Model #	Description
A	1	86000*	3-Pc. Bulkhead
B	2	8903	Jumbo Drawer Unit (3D)
C	1	8131	Wheel Well Base Cabinet
D	2	8443	Jumbo Shelf Unit
E	2	8902	Jumbo Drawer Unit (2D)
F	3	8115	Bin Dividers (18)
G	1	8918	18-Drawer Parts Cabinet

*Single piece bulkheads also available, refer to page 9 for specifications.

Cable Communications

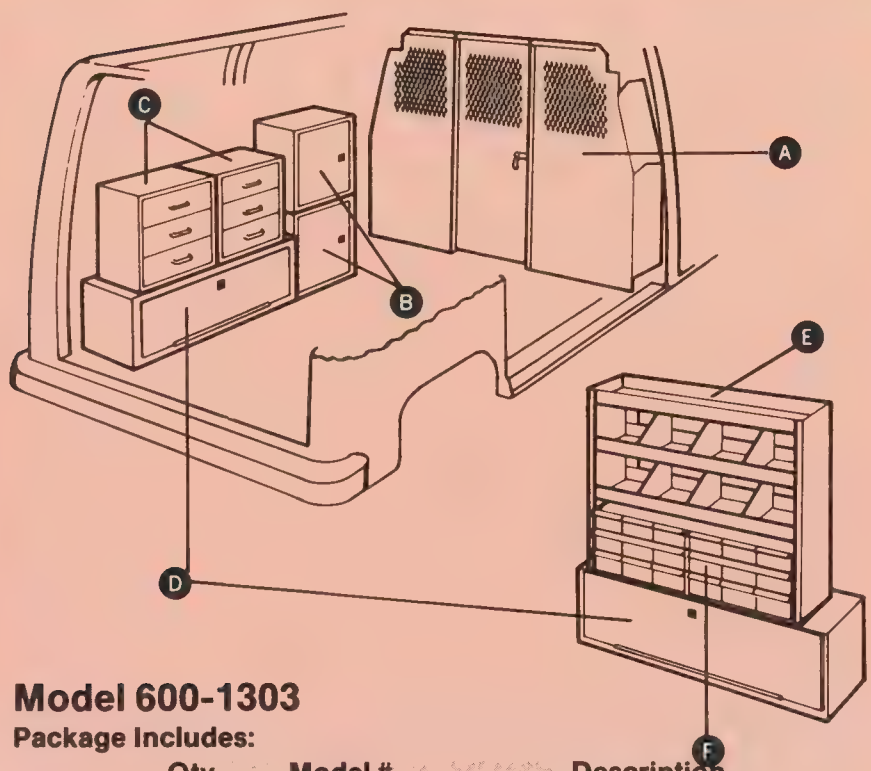

Model 600-1303

Package Includes:

	Qty.	Model #	Description
A	1	86000*	3-Pc. Bulkhead
B	2	8311	Lockable Cabinet
C	2	8903	Jumbo Drawer Unit (3D)
D	2	8141	Wheel Well Base Cabinet
E	1	8233	Welded Stack Unit
F	1	8918	18-Drawer Parts Cabinet

*Single piece bulkheads also available, refer to page 9 for specifications.

Utility Service

Model 600-1304

Package Includes:

	Qty.	Model #	Description
A	1	86000*	3-Pc. Bulkhead
B	1	8415	5-Shelf Rack Unit
C	1	8453	Jumbo Shelf Unit
D	1	8443	Jumbo Shelf Unit

*Single piece bulkheads also available, refer to page 9 for specifications.

weather guard®

GMC/Chevy Mini Van
(Astro, Safari)

Get the most out of your Astro or Safari mini van with Weather Guard® van interior packages. These highly efficient and practical interiors were designed by professionals . . . for professionals as a way to store, organize, transport and protect valuable tools, parts and equipment.

The packages on this page were specifically designed to fit the Astro/Safari mini vans. You can order them simply by specifying the package number. All packages are easily installed and come with detailed, step-by-step instructions and all assembly hardware.

Model 600-1401
General Service Package

General Service

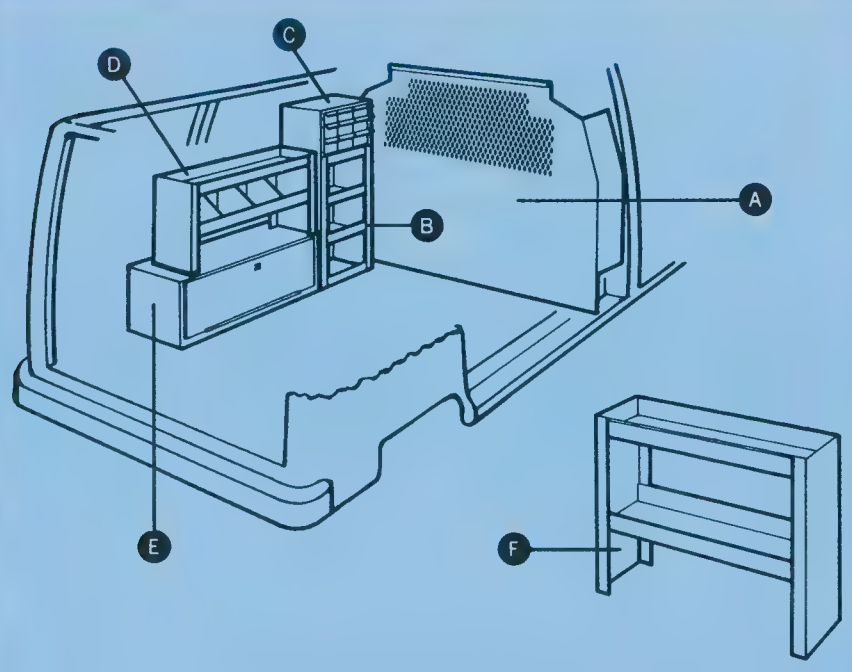

Model 600-1401
Package Includes:

	Qty.	Model #	Description
A	1	87010	1-Pc. Bulkhead
B	1	8314	4-Shelf Rack Unit
C	1	8909	9-Drawer Parts Cabinet
D	1	8133	Welded Stack Unit
E	1	8141	Wheel Well Base Cabinet
F	1	8332	Base Shelf Unit

Electronic Service

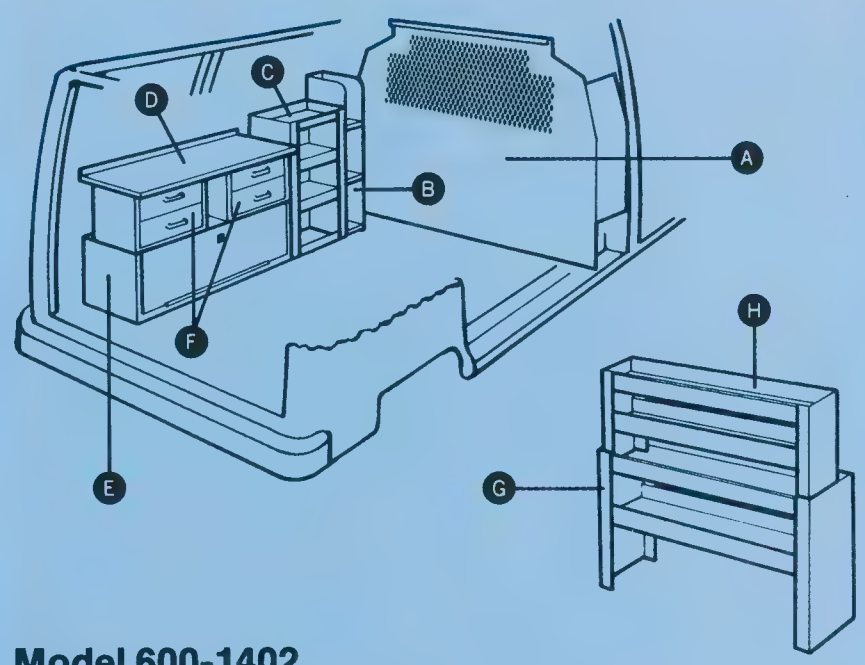

Model 600-1402
Package Includes:

	Qty.	Model #	Description
A	1	87010	1-Pc. Bulkhead
B	1	8361	Catalog File Unit
C	1	8314	4-Shelf Rack Unit
D	1	8867	Work Top
E	1	8141	Wheel Well Base Cabinet
F	2	8902	Jumbo Drawer Unit (2D)
G	1	8232	Base Shelf Unit
H	1	8132	Stacking Shelf Unit

Cable Communications

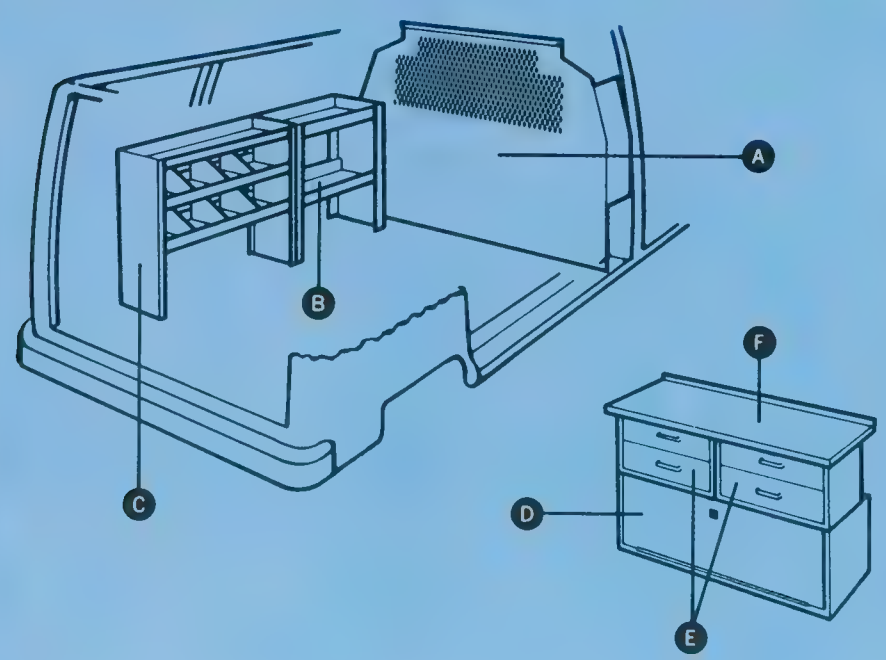

Model 600-1403

Package Includes:

	Qty.	Model #	Description
A	1	87010	1-Pc. Bulkhead
B	1	8322	Base Shelf Unit
C	1	8233	Welded Stack Unit
D	1	8131	Wheel Well Base Cabinet
E	2	8902	Jumbo Drawer Unit (2D)
F	1	8869	Work Top

Appliance/HVAC Service

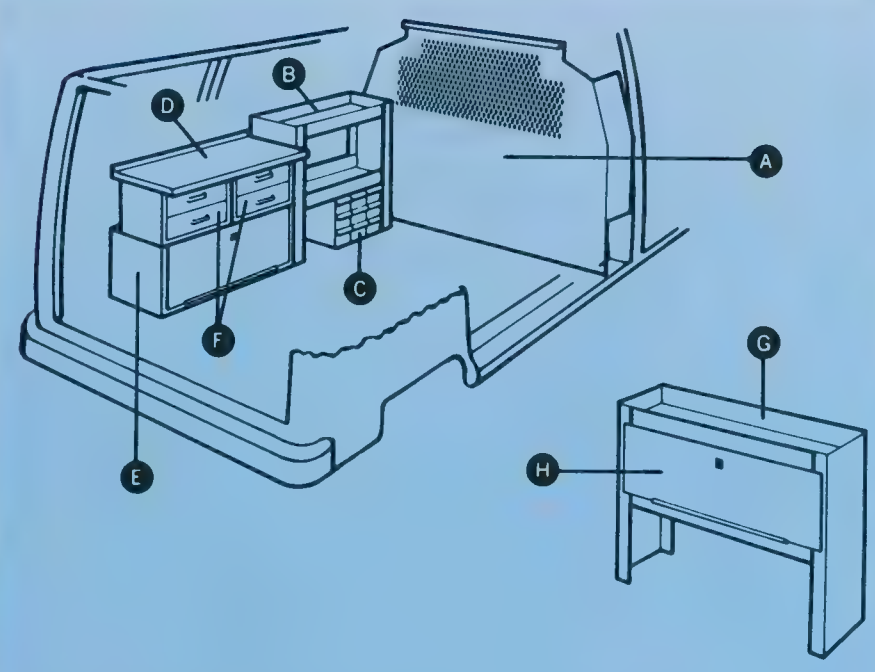

Model 600-1405

Package Includes:

	Qty.	Model #	Description
A	1	87010	1-Pc. Bulkhead
B	1	8322	Base Shelf Unit
C	1	8909	9-Drawer Parts Cabinet
D	1	8869	Work Top
E	1	8131	Wheel Well Base Cabinet
F	2	8902	Jumbo Drawer Unit (2D)
G	1	8332	Base Shelf Unit
H	1	8536	Door and Back Panel

Utility Service

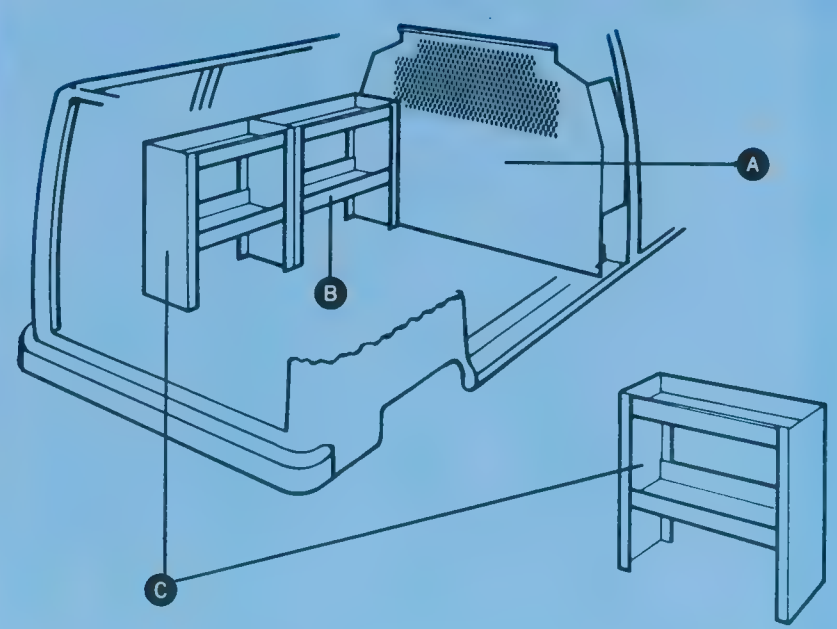

Model 600-1404

Package Includes:

	Qty.	Model #	Description
A	1	87010	1-Pc. Bulkhead
B	1	8322	Base Shelf Unit
C	2	8332	Base Shelf Unit

weather guard®

Ford Mini Van
(Aerostar)

The packages on this page were specifically designed to fit the Aerostar mini van. You can order them simply by specifying the package number. All packages are easily installed and come with detailed, step-by-step instructions and all assembly hardware.

Get the most out of your Ford mini van with Weather Guard® van interior packages. These highly efficient and practical interiors were designed for professionals ... by professionals as a way to store, organize, transport and protect valuable tools, parts and equipment.

Note: Filler tube prohibits use of 42" long units over driver's side wheel well area.

Model 600-1502
Electronic Service Package

General Service

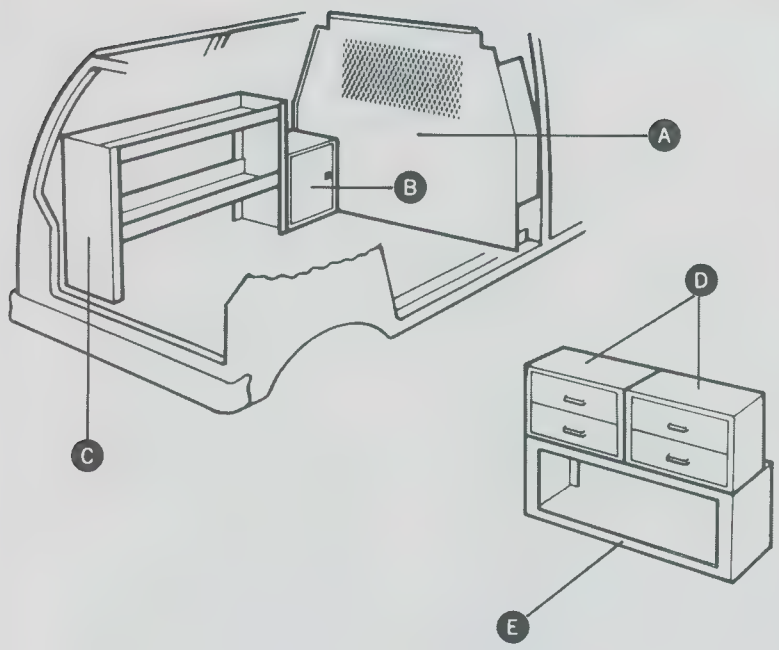

Model 600-1501
Package Includes:

	Qty.	Model #	Description
A	1	87030	1-Pc. Bulkhead
B	1	8311	Lockable Cabinet
C	1	8352	Base Shelf Unit
D	2	8902	Jumbo Drawer Unit (2D)
E	1	8130	Wheel Well Frame

Electronic Service

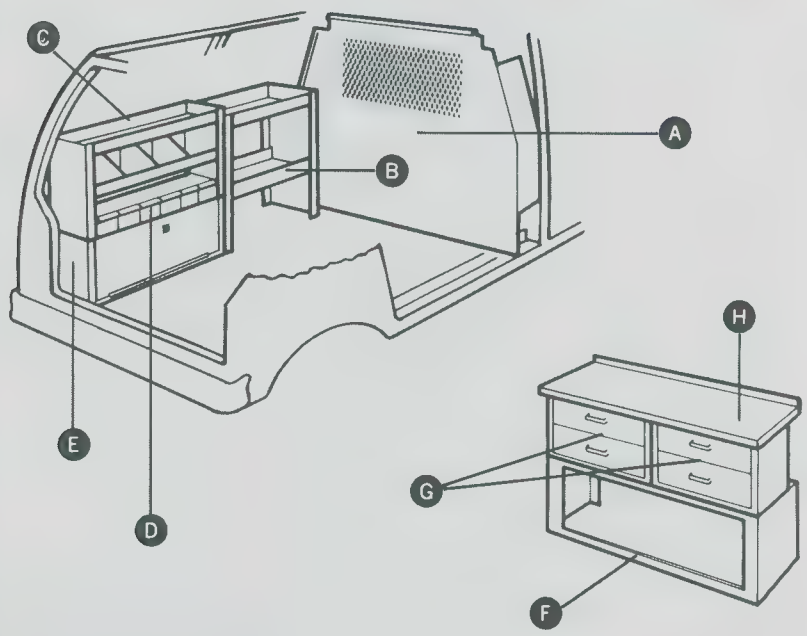

Model 600-1502
Package Includes:

	Qty.	Model #	Description
A	1	87030	1-Pc. Bulkhead
B	1	8322	Base Shelf Unit
C	1	8133	Welded Stack Unit
D	1	8906	6-Drawer Parts Cabinet
E	1	8131	Wheel Well Base Cabinet
F	1	8130	Wheel Well Frame
G	2	8902	Jumbo Drawer Units (2D)
H	1	8869	Work Top

Appliance/HVAC Service

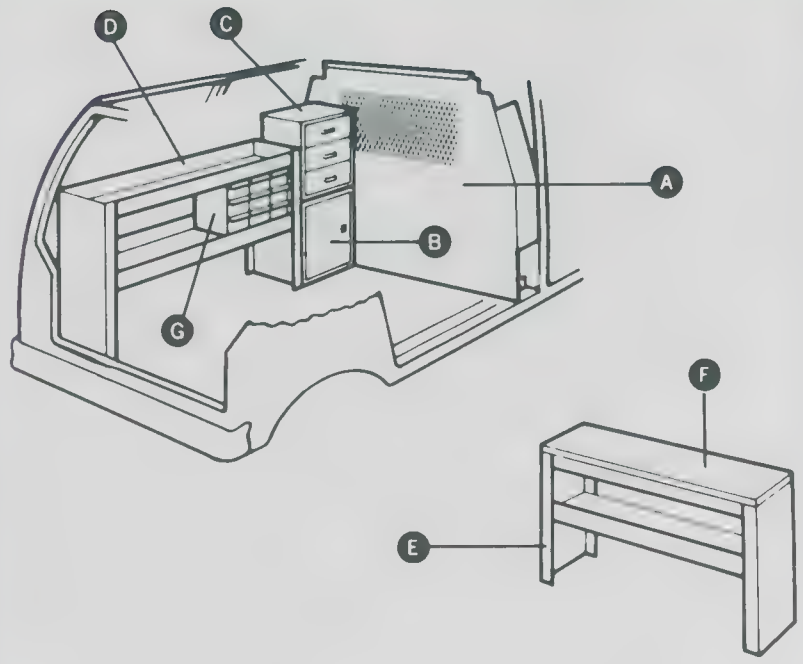

Model 600-1505

Package Includes:

	Qty.	Model #	Description
A	1	87030	1-Pc. Bulkhead
B	1	8311	Lockable Cabinet
C	1	8903	Jumbo Shelf Unit (3D)
D	1	8352	Base Shelf Unit
E	1	8232	Base Shelf Unit
F	1	8236	Work Cover
G	1	8909	9-Drawer Parts Cabinet

Cable Communications

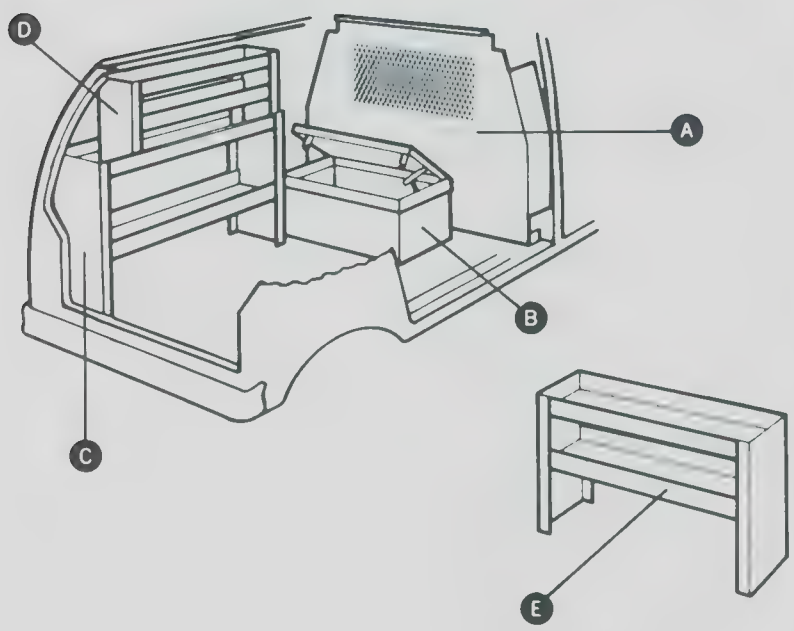

Model 600-1503

Package Includes:

	Qty.	Model #	Description
A	1	87030	1-Pc. Bulkhead
B	1	9032	Strong Box
C	1	8352	Base Shelf Unit
D	1	8142	Stacking Shelf Unit
E	1	8232	Base Shelf Unit

Utility Service

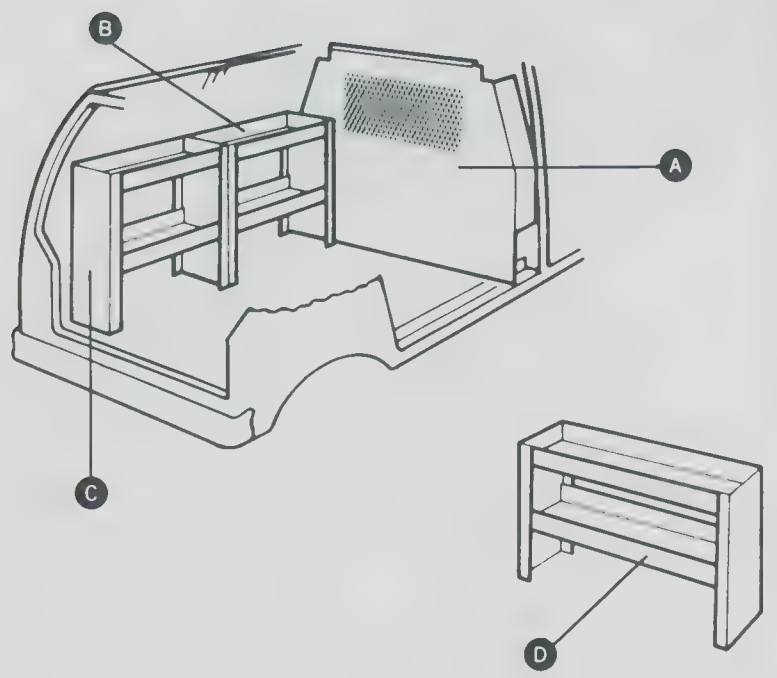

Model 600-1504

Package Includes:

	Qty.	Model #	Description
A	1	87030	1-Pc. Bulkhead
B	1	8322	Base Shelf Unit
C	1	8332	Base Shelf Unit
D	1	8232	Base Shelf Unit

weather guard®

Dodge/Chrysler Mini Van (Caravan, Voyager)

Get the most out of your Dodge mini van with Weather Guard® van interior packages. These highly efficient and practical interiors were designed by professionals ... for professionals as a way to store, organize, transport and protect valuable tools, parts and equipment.

The packages on this page were specifically designed to fit the Caravan/Voyager mini vans. You can order them simply by specifying the package number. All packages are easily installed and come with detailed, step-by-step instructions and all mounting hardware.

General Service

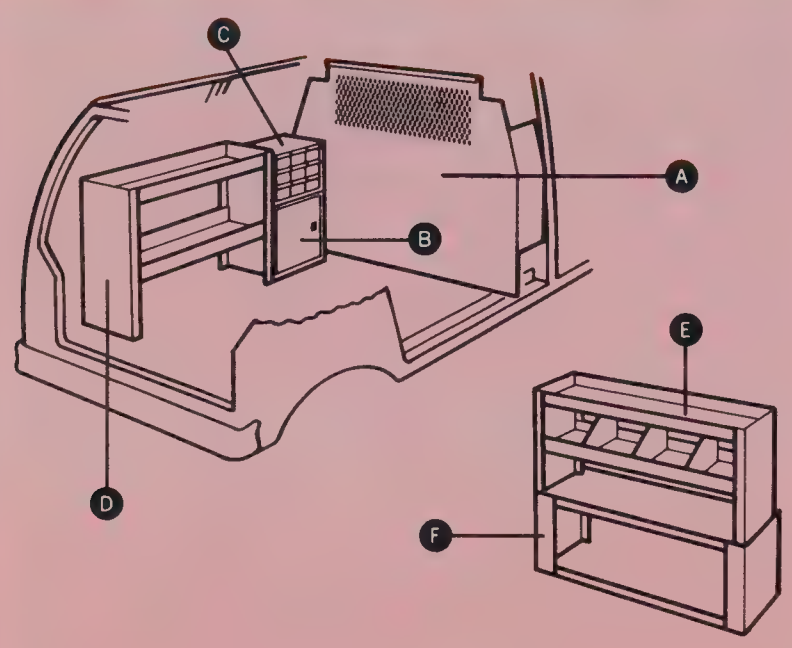

Model 600-1601

Package Includes:

	Qty.	Model #	Description
A	1	87020	1-Pc. Bulkhead
B	1	8311	Lockable Cabinet
C	1	8909	9-Drawer Parts Cabinet
D	1	8342	Base Shelf Unit
E	1	8133	Welded Stack Unit
F	1	8130	Wheel Well Frame

Electronic Service

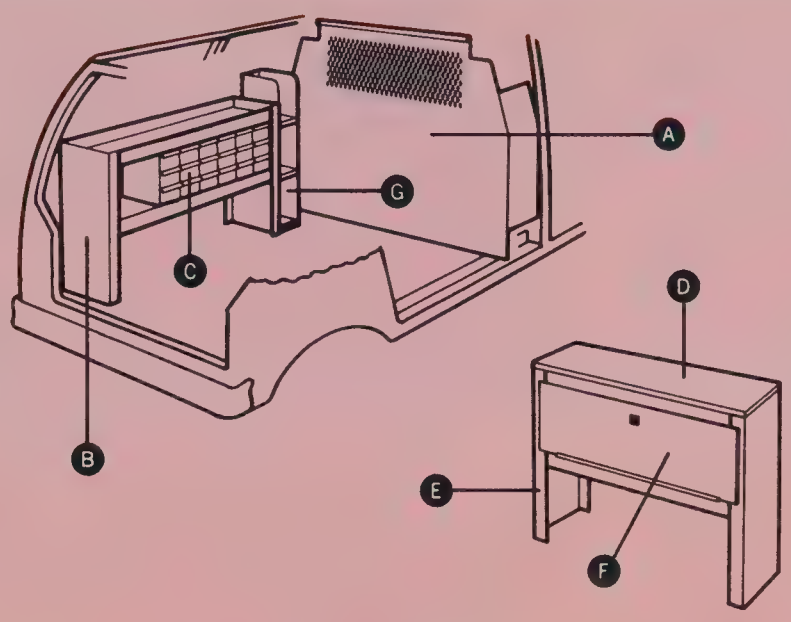

Model 600-1602

Package Includes:

	Qty.	Model #	Description
A	1	87020	1-Pc. Bulkhead
B	1	8352	Base Shelf Unit
C	1	8918	18-Drawer Parts Cabinet
D	1	8236	Work Cover
E	1	8332	Base Shelf Unit
F	1	8536	Door and Back Panel
G	1	8361	Catalog File Unit

Appliance/HVAC Service

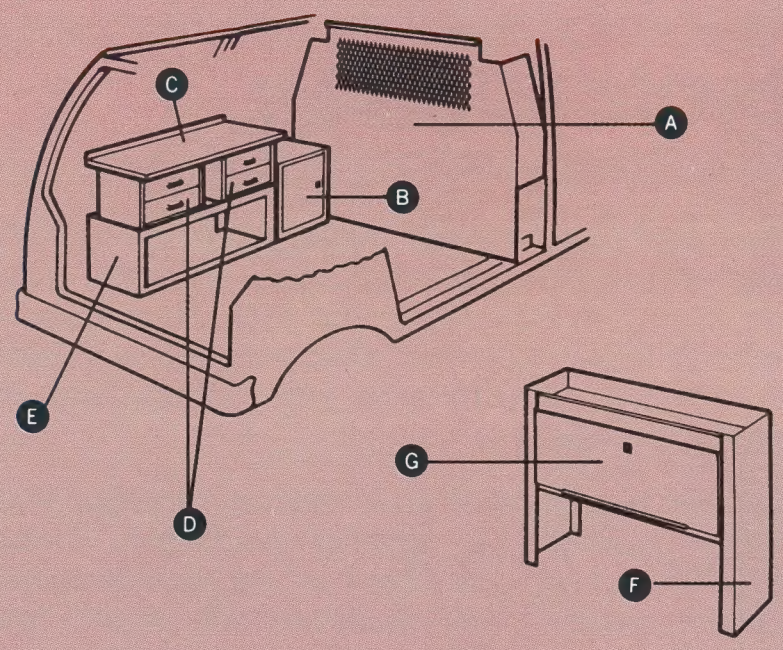

Model 600-1605

Package Includes:

	Qty.	Model #	Description
A	1	87020	1-Pc. Bulkhead
B	1	8311	Lockable Cabinet
C	1	8867	Work Top
D	2	8902	Jumbo Drawer Unit (2D)
E	1	8140	Wheel Well Base Frame
F	1	8332	Base Shelf Unit
G	1	8536	Door and Back Panel

Cable Communications

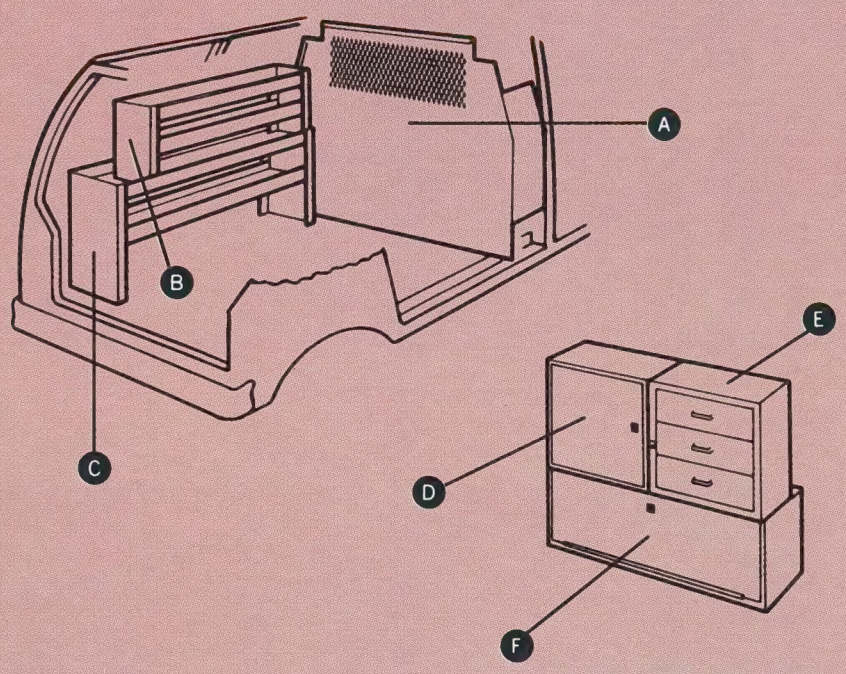

Model 600-1603

Package Includes:

	Qty.	Model #	Description
A	1	87020	1-Pc. Bulkhead
B	1	8152	Stacking Shelf Unit
C	1	8262	Base Shelf Unit
D	1	8311	Lockable Cabinet
E	1	8903	Jumbo Drawer Unit (3D)
F	1	8131	Wheel Well Base Cabinet

Utility Service

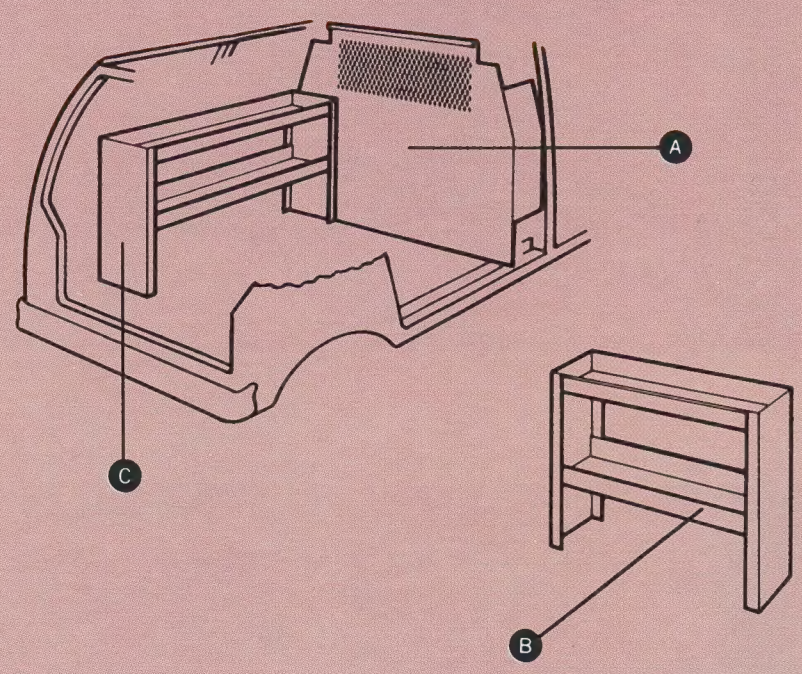

Model 600-1604

Package Includes:

	Qty.	Model #	Description
A	1	87020	1-Pc. Bulkhead
B	1	8332	Base Shelf Unit
C	1	8362	Base Shelf Unit

weather guard®

Toyota Mini Van

The packages on this page were specifically designed to fit Toyota mini vans. You can order them simply by specifying the appropriate model number. All packages are easily installed and come with detailed, step-by-step instructions and all assembly hardware.

Get the most out of your Toyota mini van with Weather Guard® van interior packages. These highly efficient and practical interiors were designed for professionals ... by professionals as the best way to store, organize, transport and protect valuable tools, parts and equipment.

Note: Special care should be taken to be sure to leave the area accessible over the battery cover.

Model 600-1705
Appliance/HVAC Service Package

General Service

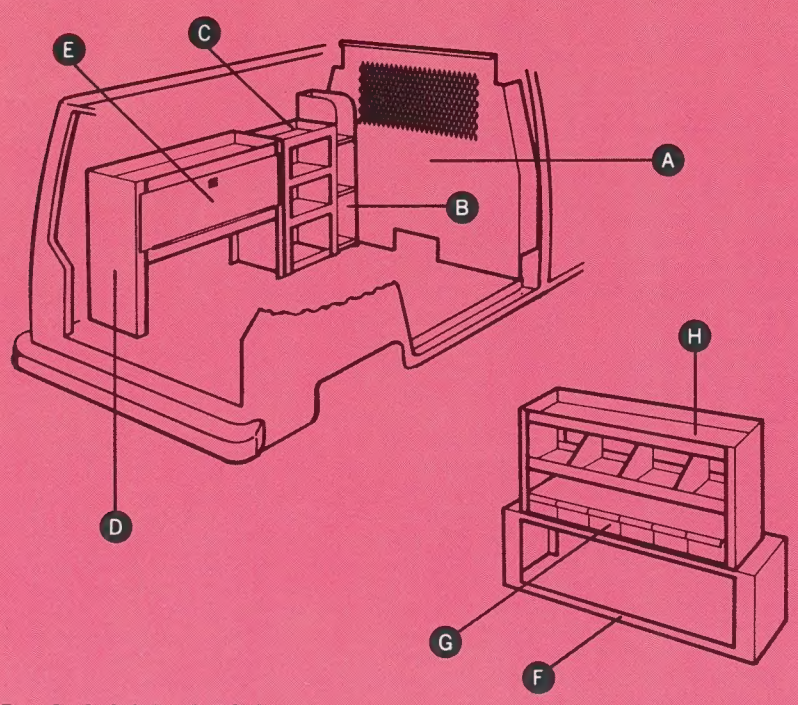

Model 600-1701

Package Includes:

	Qty.	Model #	Description
A	1	87040	1-Pc. Bulkhead
B	1	8361	Catalog File Unit
C	1	8314	4-Shelf Rack Unit
D	1	8342	Base Shelf Unit
E	1	8542	Door and Back Panel
F	1	8140	Wheel Well Base Frame
G	1	8906	6-Drawer Parts Cabinet
H	1	8133	Welded Stack Unit

Electronic Service

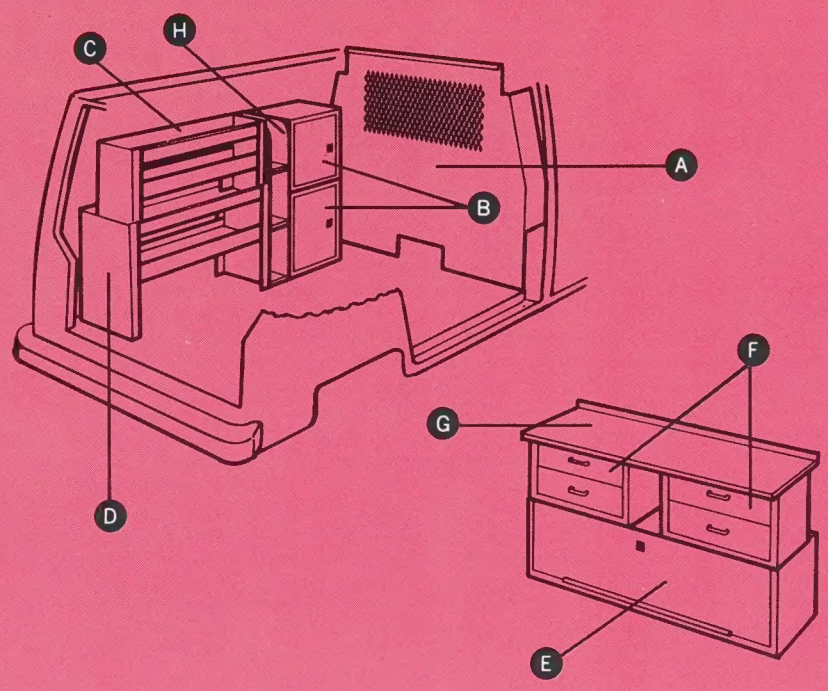

Model 600-1702

Package Includes:

	Qty.	Model #	Description
A	1	87040	1-Pc. Bulkhead
B	2	8311	Lockable Cabinet
C	1	8132	Stacking Shelf Unit
D	1	8232	Base Shelf Unit
E	1	8141	Wheel Well Base Cabinet
F	2	8902	Jumbo Drawer Unit (2D)
G	1	8867	Work Top
H	1	8361	Catalog File Unit

Appliance/HVAC Service

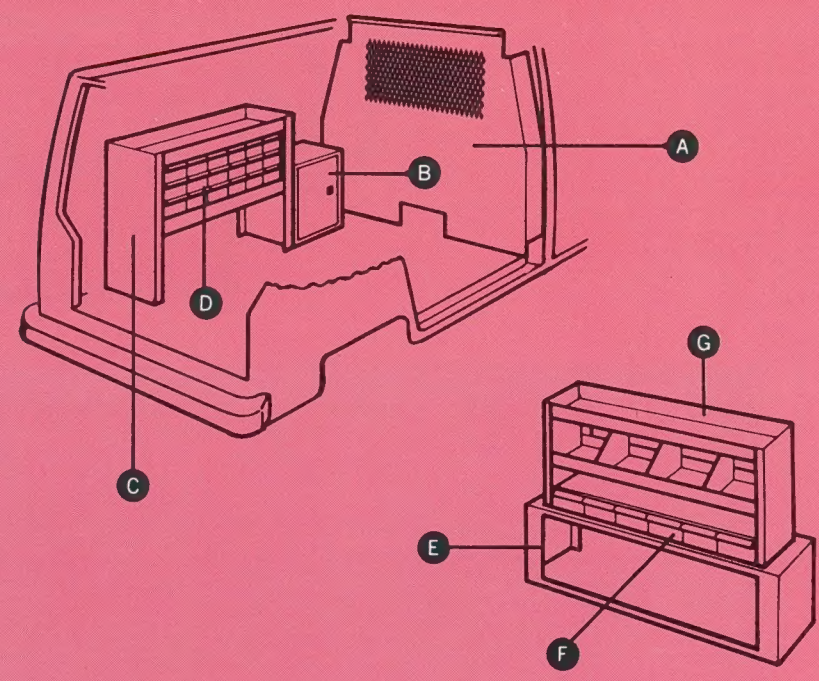

Model 600-1705

Package Includes:

	Qty.	Model #	Description
A	1	87040	1-Pc. Bulkhead
B	1	8311	Lockable Cabinet
C	1	8342	Base Shelf Unit
D	1	8918	18-Drawer Parts Cabinet
E	1	8140	Wheel Well Frame
F	1	8906	6-Drawer Parts Cabinet
G	1	8133	Welded Stack Unit

Cable Communications

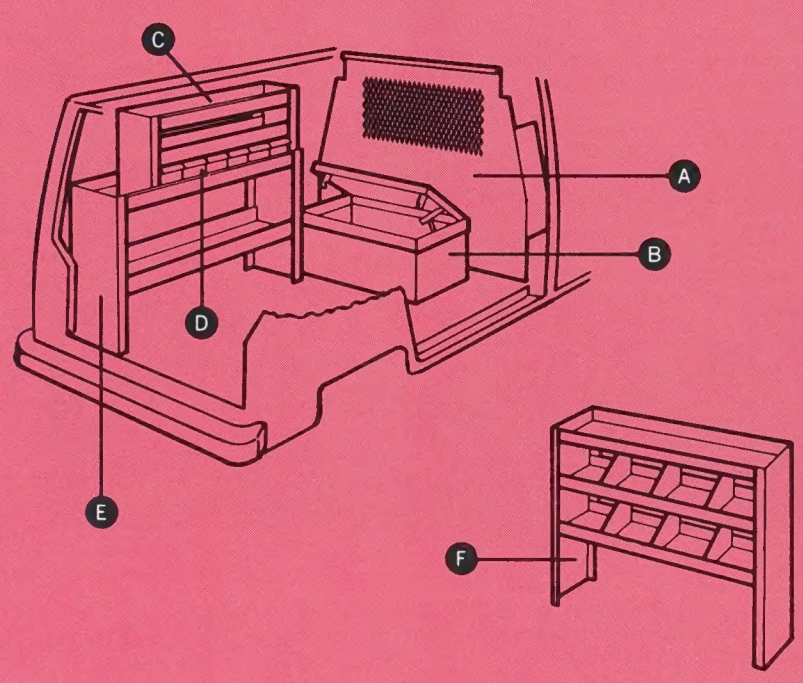

Model 600-1703

Package Includes:

	Qty.	Model #	Description
A	1	87040	1-Pc. Bulkhead
B	1	9032	Strong Box
C	1	8142	Stacking Shelf Unit
D	1	8906	6-Drawer Parts Cabinet
E	1	8352	Base Shelf Unit
F	1	8233	Welded Stack Unit

Utility Service

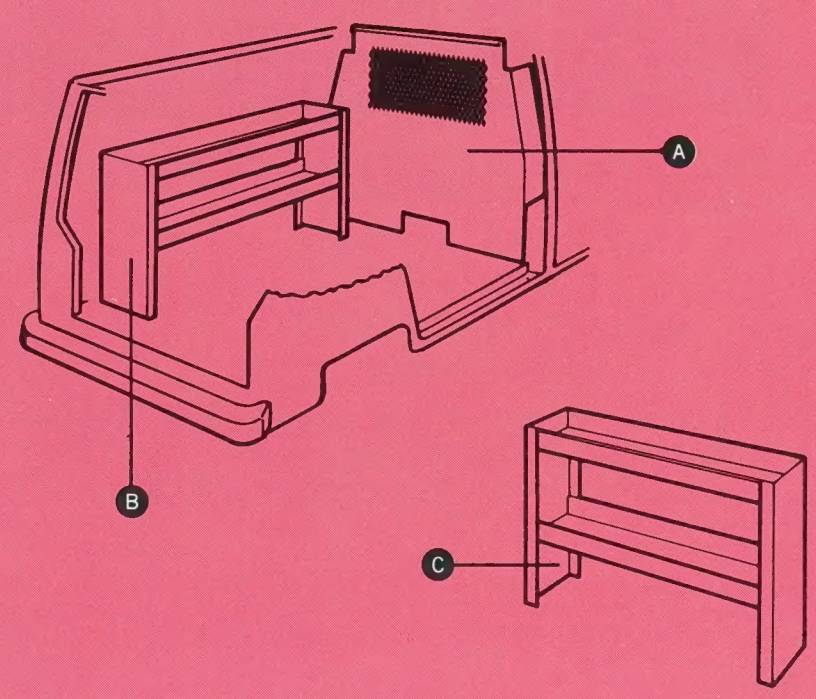

Model 600-1704

Package Includes:

	Qty.	Model #	Description
A	1	87040	1-Pc. Bulkhead
B	1	8362	Base Shelf Unit
C	1	8342	Base Shelf Unit

KNAACK®

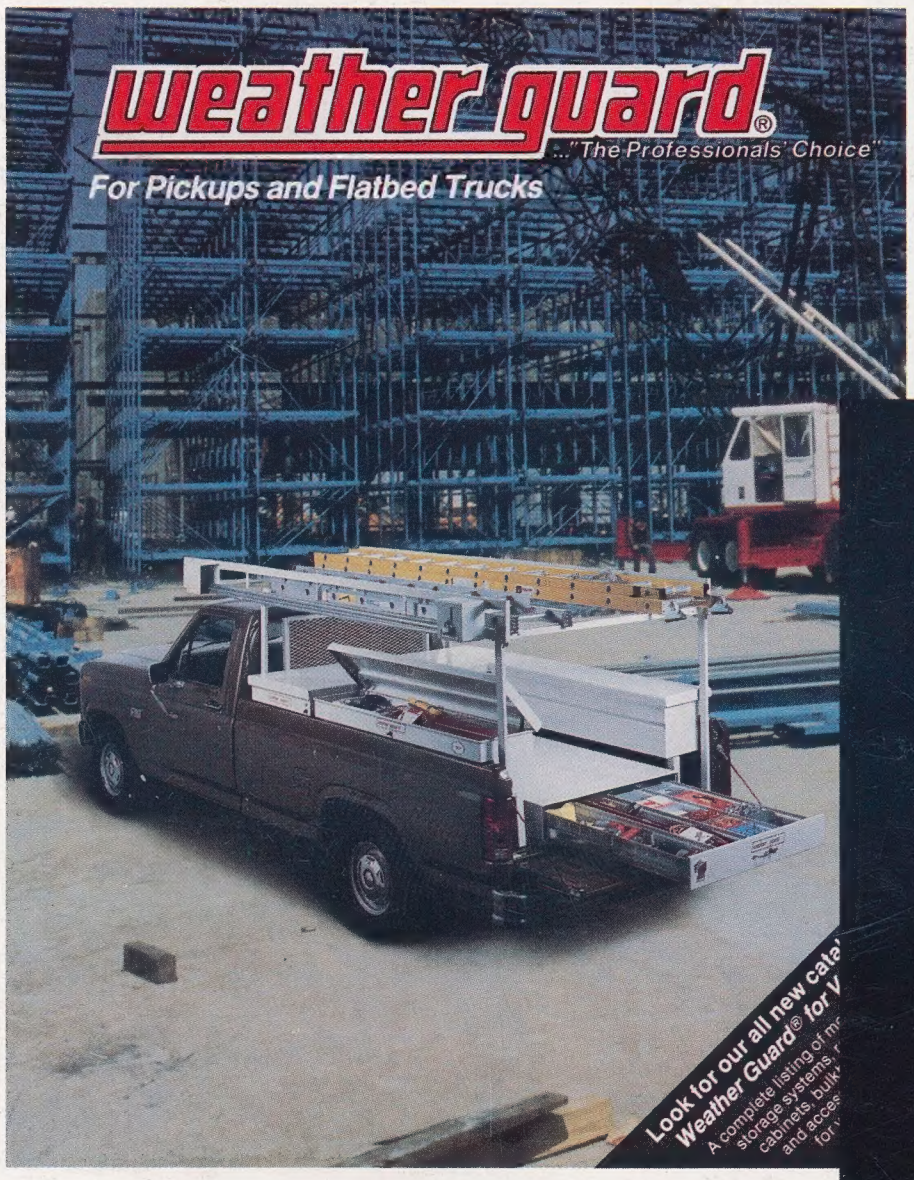

Weather Guard® offers a complete line of storage boxes for full-size and mini pickups, flatbeds, and Service bodies. Call or write for our full-color catalog.

Knaack — the largest selection of chests, cabinets and work benches for jobsite convenience and security. Write or call for our full-color catalog.

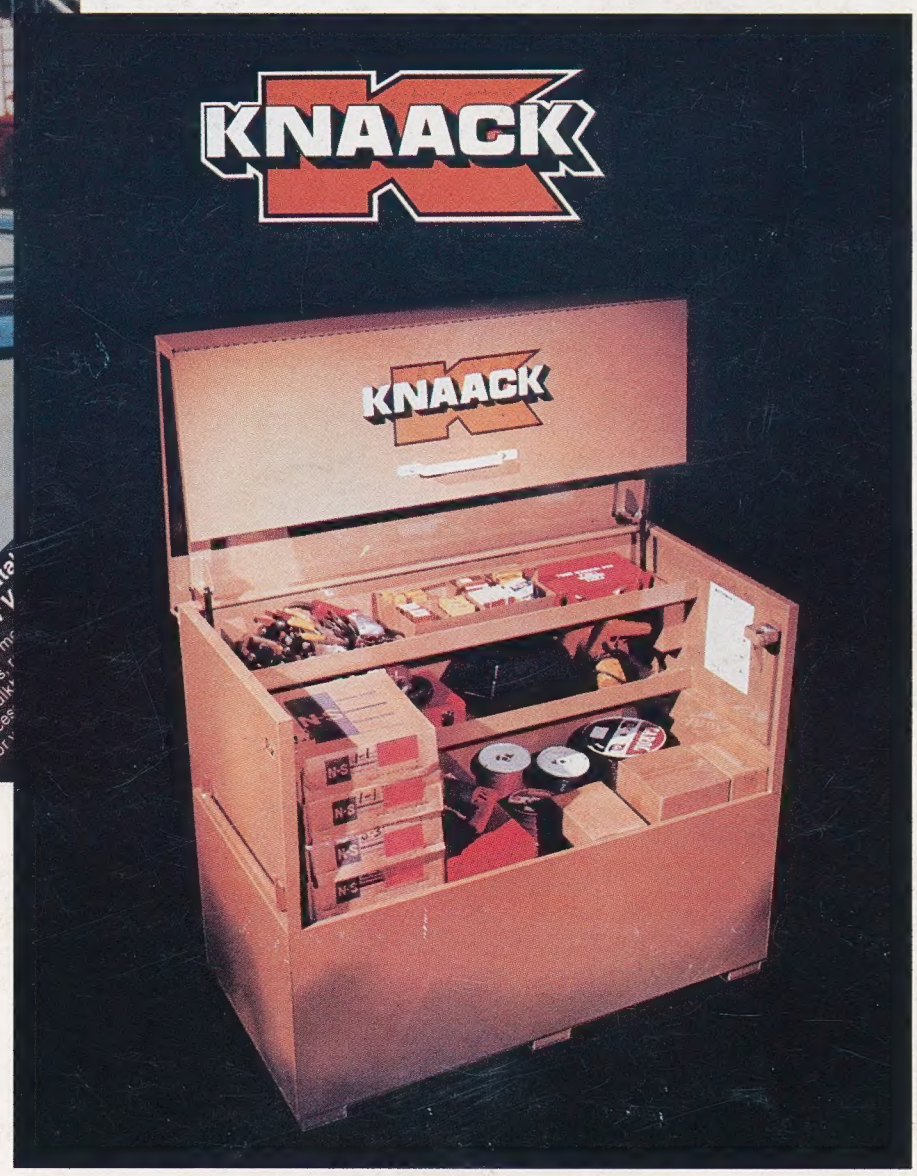

Your Knaack and Weather Guard® distributor:

LACEY TRUCK EQUIPMENT, INC.
50 MYSTIC AVENUE
P. O. BOX 87
MEDFORD, MASS. 02155
396-2880

For the name of the Knaack and Weather Guard® dealer nearest you, **CALL TOLL-FREE 1-800-435-6100.** (In Illinois call 815-459-6020.)

ANOTHER QUALITY PRODUCT by KNAACK MFG. CO. CRYSTAL LAKE, IL 60014 815/459-6020

The sign of Knaack Quality

LACEY TRUCK EQUIPMENT, INC.
50 MYSTIC AVENUE
P. O. BOX 87
MEDFORD, MASS. 02155
396-2880

All designs subject to change without notice.

KNAACK MFG. CO. • 420 E. Terra Cotta Avenue • Crystal Lake, Illinois • 60014 • Phone: 815-459-6020

Form No. WVC286IP

© KNAACK MFG. CO. Printed in U.S.A.